SL-700R

PREMIUM

Roughter

Training Manual

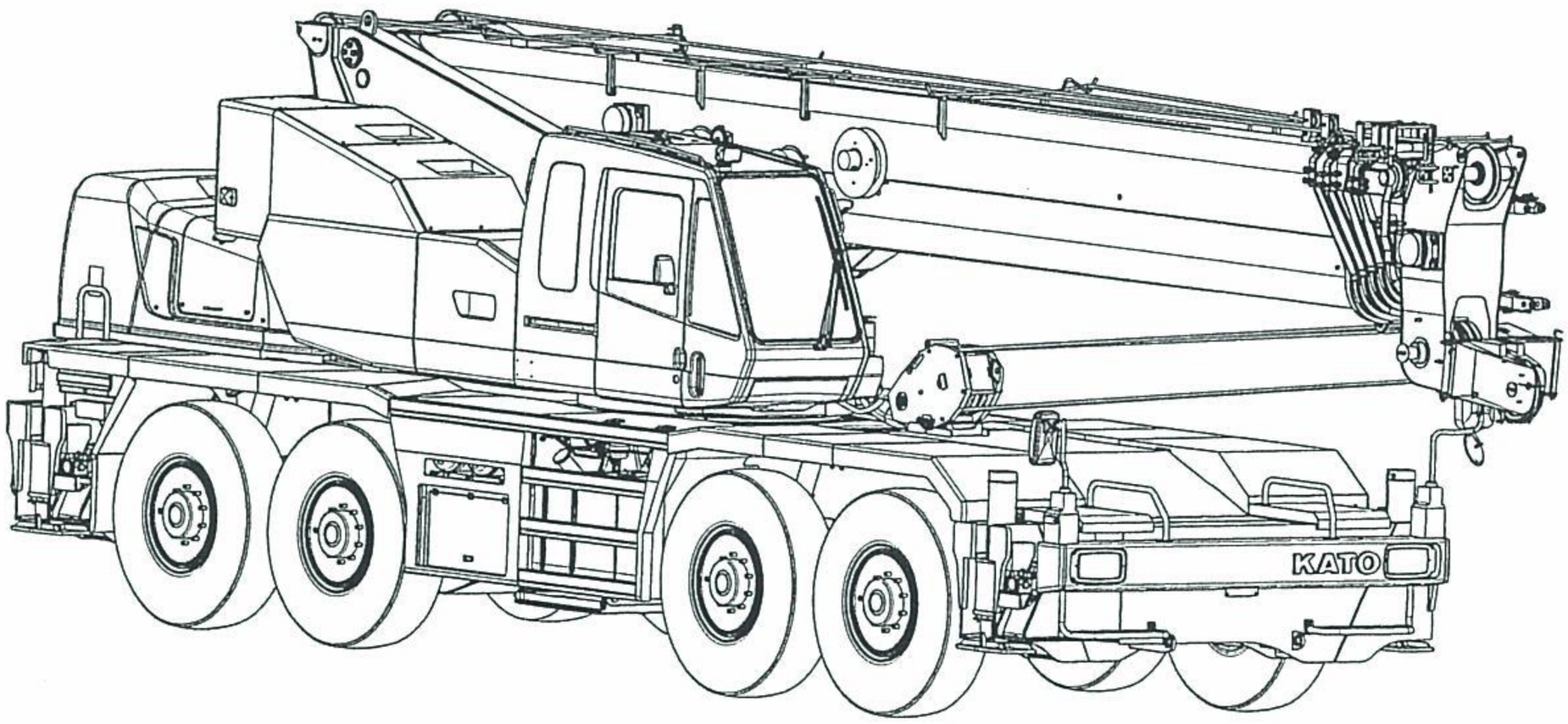

KATO WORKS CO., LTD

Spec. No. 5210000200

SPECIFICATION OF SL-700R

1. Crane Specification

Maximum lifting capacity	: 70 ton × 2.5 m
Boom length	: 10.0 m – 44.5 m (6 section)
Fly jib length	: 8.3 m – 17.5 m (3 section, offset 7°– 60°)
Boom derricking angle	: 0°– 84°
*Boom derricking time	: 66 s / 0°– 84°
*Boom extending speed	: 10.0 m – 44.5 m / 135 s

*Hoisting line speed (winch up)

Main winch	: 160 m/min	(at 5th layer)
Auxiliary winch	: 150 m/min	(at 4th layer)

*Hoisting hook speed (winch up)

Main winch (parts of line:16)	: 10 m/min	(at 5th layer)
Auxiliary winch (parts of line:1)	: 150 m/min	(at 4th layer)

*Slewing speed : 1.8 min^{-1}

*Speed / Time : Subject to no load

Wire rope for hoisting

Main winch;

Diameter	: 18 mm
Length	: 240 m

Auxiliary winch;

Diameter	: 18 mm
Length	: 131 m

Hydraulic system

Oil pump	: 4 pumps, plunger type
Hoisting motor	: Axial plunger type
Slewing motor	: Axial plunger type
Cylinder	: Double acting type
Control valve	: Double acting with integral check and relief valves
Oil reservoir capacity	: 740 L

Spec.No.5210000200

LIFTING CAPACITIES (6)

(Unit : Metric ton)

With retracted outriggers (2.69m) over side			
Working radius(m)	10.0m Boom	16.9m Boom	23.8m Boom
2.5	20.00	15.00	12.00
3.0	20.00	15.00	12.00
3.5	18.70	15.00	12.00
4.0	14.60	14.30	12.00
4.5	11.70	11.40	10.50
5.0	9.60	9.30	8.90
5.5	8.00	7.70	7.50
6.0	6.80	6.50	6.30
6.5	5.80	5.50	5.40
7.0	5.00	4.60	4.60
7.5		3.90	3.90
8.0		3.30	3.20
9.0		2.30	
10.0		1.30	
Critical boom angle(°)	—	41	64
Parts of line	10	7	5
Standard hook	for 48t	for 34t	
Hook mass (kg)	470	330	

Spec.No.5210000200

LIFTING CAPACITIES (7)

(Unit : Metric ton)

Outriggers extended over front							
Working radius(m)	10.0m Boom	16.9m Boom	23.8m Boom	30.7m Boom	37.6m Boom	41.5m Boom	44.5m Boom
2.5	70.00*	32.00	25.00	12.50			
3.0	61.00*	32.00	25.00	12.50			
3.5	55.00*	32.00	25.00	12.50	12.00		
4.0	49.20*	32.00	25.00	12.50	12.00	10.00	
4.5	44.10	32.00	25.00	12.50	12.00	10.00	8.00
5.0	39.50	32.00	25.00	12.50	12.00	10.00	8.00
5.5	35.70	32.00	25.00	12.50	12.00	10.00	8.00
6.0	32.50	32.00	23.40	12.50	12.00	10.00	8.00
6.5	29.50	29.00	22.00	12.50	12.00	10.00	8.00
7.0	26.80	26.40	20.70	12.50	12.00	10.00	8.00
7.5		24.00	19.50	12.50	12.00	10.00	8.00
8.0		22.00	18.50	12.50	12.00	10.00	8.00
9.0		19.00	16.60	12.50	12.00	10.00	8.00
10.0		16.30	14.90	12.50	12.00	10.00	8.00
11.0		13.70	13.60	12.00	11.10	10.00	8.00
12.0		11.50	12.40	10.90	10.20	9.40	8.00
13.0		10.00	11.40	10.00	9.40	8.70	8.00
14.0			10.50	9.20	8.60	8.00	7.50
15.0			9.70	8.50	8.00	7.50	7.00
16.0			8.40	7.80	7.40	7.00	6.60
17.0			7.30	7.30	6.90	6.50	6.20
18.0			6.40	6.80	6.40	6.10	5.80
19.0			5.60	6.30	6.00	5.80	5.40
20.0			4.90	5.80	5.60	5.40	5.10
21.0				5.20	5.30	5.10	4.80
22.0				4.70	5.00	4.80	4.50
24.0				3.80	4.30	4.20	4.00
26.0				2.90	3.50	3.60	3.50
28.0					2.80	3.00	3.10
30.0					2.20	2.50	2.60
32.0					1.70	2.00	2.10
34.0					1.30	1.60	1.70
36.0						1.20	1.30
38.0						0.90	1.00
40.0							0.70
Critical boom angle(°)	—	—	—	—	—	—	–
Parts of line	16*/10	7	5	4	4	4	4
Standard hook	for 70t*/48t	for 34t					
Hook mass (t)	530*/470	330					

LIFTING CAPACITIES (8)

44.5m Boom+8.3m SL Jib								
Outriggers fully extended (7.6m) over side and over rear								
Boomangle (°)	Offset 7°		Offset 25°		Offset 45°		Offset 60°	
	Working radius (m)	Load (ton)	Working radius (m)	Load (ton)	Working radius (m)	Load (ton)	Working radius (m)	Load (ton)
84	5.8	4.00	8.7	3.50	10.5	2.20	11.5	1.40
80	10.1	4.00	12.8	3.50	14.2	2.20	15.0	1.40
77	13.3	4.00	15.6	3.20	16.9	2.15	17.5	1.40
75	15.4	4.00	17.5	2.90	18.7	2.10	19.2	1.40
73	17.3	3.65	19.2	2.65	20.4	2.05	20.8	1.40
70	19.9	3.20	21.7	2.45	23.0	2.00	23.2	1.40
68	21.5	2.85	23.2	2.25	24.6	1.90	24.7	1.40
65	24.0	2.40	25.6	2.05	26.9	1.80	26.9	1.40
63	25.5	1.90	27.1	1.80	28.3	1.65	28.3	1.40
60	27.5	1.30	29.1	1.20	30.1	1.10		
57	29.5	0.75						
Critical boom angle(°)	56		59		59		62	
Parts of line	1							
Standard hook	For 5t							
Hook mass (kg)	120							

LIFTING CAPACITIES (9)

44.5m Boom+8.3m SL Jib								
Outriggers intermediately extended (7.2m) over side								
Boomangle (°)	Offset 7°		Offset 25°		Offset 45°		Offset 60°	
	Working radius (m)	Load (ton)	Working radius (m)	Load (ton)	Working radius (m)	Load (ton)	Working radius (m)	Load (ton)
84	5.8	4.00	8.7	3.50	10.5	2.20	11.5	1.40
80	10.1	4.00	12.8	3.50	14.2	2.20	15.0	1.40
77	13.3	4.00	15.6	3.20	16.9	2.15	17.5	1.40
75	15.4	4.00	17.5	2.90	18.7	2.10	19.2	1.40
73	17.3	3.65	19.2	2.65	20.4	2.05	20.8	1.40
70	19.9	3.20	21.7	2.45	23.0	2.00	23.2	1.40
68	21.5	2.85	23.2	2.25	24.6	1.90	24.7	1.40
65	23.8	2.10	25.6	1.75	26.8	1.80	26.9	1.40
63	25.2	1.65	27.0	1.40	28.1	1.40	28.3	1.40
60	27.4	0.95	29.0	0.90	30.0	0.80		
Critical boom angle(°)	59		59		59		62	
Parts of line	1							
Standard hook	For 5t							
Hook mass (kg)	120							

LIFTING CAPACITIES (10)

44.5m Boom+8.3m SL Jib								
Outriggers intermediately extended (6.5m) over side								
Boomangle (°)	Offset 7°		Offset 25°		Offset 45°		Offset 60°	
	Working radius (m)	Load (ton)	Working radius (m)	Load (ton)	Working radius (m)	Load (ton)	Working radius (m)	Load (ton)
84	5.8	4.00	8.7	3.50	10.5	2.20	11.5	1.40
80	10.1	4.00	12.8	3.50	14.2	2.20	15.0	1.40
77	13.3	4.00	15.6	3.20	16.9	2.15	17.5	1.40
75	15.4	4.00	17.5	2.90	18.7	2.10	19.2	1.40
73	17.3	3.65	19.2	2.65	20.4	2.05	20.8	1.40
70	19.9	2.95	21.6	2.45	23.0	2.00	23.2	1.40
68	21.4	2.30	23.0	2.10	24.6	1.90	24.7	1.40
65	23.5	1.50	25.2	1.40	26.2	1.35		
Critical boom angle(°)	64		64		64		67	
Parts of line	1							
Standard hook	For 5t							
Hook mass (kg)	120							

LIFTING CAPACITIES (11)

44.5m Boom+8.3m SL Jib								
Outriggers intermediately extended (5.4m) over side								
Boomangle (°)	Offset 7°		Offset 25°		Offset 45°		Offset 60°	
	Working radius (m)	Load (ton)	Working radius (m)	Load (ton)	Working radius (m)	Load (ton)	Working radius (m)	Load (ton)
84	5.8	4.00	8.7	3.50	10.5	2.20	11.4	1.40
80	10.1	4.00	12.8	3.50	14.2	2.20	15.0	1.40
77	13.3	4.00	15.6	3.20	16.9	2.15	17.5	1.40
75	15.4	3.60	17.5	2.90	18.7	2.10	19.2	1.40
73	17.0	2.90	19.0	2.50	20.4	2.05	20.8	1.40
70	19.2	2.00	21.2	1.65	22.7	1.50	23.2	1.40
Critical boom angle(°)	69		69		69		69	
Parts of line	1							
Standard hook	For 5t							
Hook mass (kg)	120							

LIFTING CAPACITIES (12)

44.5m Boom+8.3m SL Jib								
Outriggers intermediately extended (4.3m) over side								
Boomangle (°)	Offset 7°		Offset 25°		Offset 45°		Offset 60°	
	Working radius (m)	Load (ton)	Working radius (m)	Load (ton)	Working radius (m)	Load (ton)	Working radius (m)	Load (ton)
84	5.8	4.00	8.7	3.50	10.5	2.20	11.5	1.40
80	10.1	4.00	12.8	3.50	14.2	2.20	15.0	1.40
77	13.2	3.45	15.6	2.70	16.9	2.15	17.5	1.40
75	14.8	2.60						
Critical boom angle(°)	74		76		76		76	
Parts of line	1							
Standard hook	For 5t							
Hook mass (kg)	5.0							

LIFTING CAPACITIES (13)

44.5m Boom+8.3m SL Jib								
Outriggers extended over front								
Boomangle (°)	Offset 7°		Offset 25°		Offset 45°		Offset 60°	
	Working radius (m)	Load (ton)	Working radius (m)	Load (ton)	Working radius (m)	Load (ton)	Working radius (m)	Load (ton)
84	5.8	4.00	8.7	3.50	10.5	2.20	11.5	1.40
80	10.1	4.00	12.8	3.50	14.2	2.20	15.0	1.40
77	13.3	4.00	15.6	3.20	16.9	2.15	17.5	1.40
75	15.4	4.00	17.5	2.90	18.7	2.10	19.2	1.40
73	17.3	3.65	19.2	2.65	20.4	2.05	20.8	1.40
70	19.9	3.20	21.7	2.45	23.0	2.00	23.2	1.40
68	21.5	2.85	23.2	2.25	24.6	1.90	24.7	1.40
65	24.0	2.50	25.6	2.05	26.9	1.80	26.9	1.40
63	25.5	2.20	27.1	1.80	28.3	1.65	28.3	1.40
60	27.9	1.95	29.4	1.65	30.4	1.50		
57	30.1	1.65	31.6	1.45	32.3	1.35		
54	32.3	1.45	33.7	1.30	34.2	1.20		
51	34.3	1.30	35.7	1.20	36.0	1.15		
49	35.6	0.90	36.7	0.85	37.1	0.85		
46	37.3	0.50	38.2	0.50	38.6	0.50		
Critical boom angle(°)	45		45		45		62	
Parts of line	1							
Standard hook	For 5t							
Hook mass (kg)	120							

LIFTING CAPACITIES (14)

44.5m Boom+12.9m SL Jib								
Outriggers fully extended (7.6m) over side and over rear								
Boomangle (°)	Offset 7°		Offset 25°		Offset 45°		Offset 60°	
	Working radius (m)	Load (ton)	Working radius (m)	Load (ton)	Working radius (m)	Load (ton)	Working radius (m)	Load (ton)
84	6.9	2.50	11.3	2.40	14.1	1.30	15.7	0.70
80	11.6	2.50	15.5	2.25	18.1	1.30	19.1	0.70
77	15.1	2.50	18.6	2.10	20.9	1.30	21.8	0.70
75	17.3	2.50	20.5	2.00	22.7	1.25	23.5	0.70
73	19.4	2.50	22.3	1.85	24.5	1.25	25.2	0.70
70	22.4	2.35	25.0	1.70	27.0	1.20	27.6	0.70
68	24.3	2.10	26.8	1.55	28.7	1.20	29.1	0.70
65	26.9	1.90	29.4	1.40	31.1	1.15	31.3	0.70
63	28.4	1.50	31.1	1.30	32.6	1.10	32.7	0.70
60	30.7	0.95	33.2	0.90	34.6	0.80		
Critical boom angle(°)	59		59		59		62	
Parts of line	1							
Standard hook	For 5t							
Hook mass (kg)	120							

LIFTING CAPACITIES (15)

44.5m Boom+12.9m SL Jib								
Outriggers intermediately extended (7.2m) over side								
Boomangle (°)	Offset 7°		Offset 25°		Offset 45°		Offset 60°	
	Working radius (m)	Load (ton)	Working radius (m)	Load (ton)	Working radius (m)	Load (ton)	Working radius (m)	Load (ton)
84	6.9	2.50	11.3	2.40	14.1	1.30	15.5	0.70
80	11.6	2.50	15.5	2.20	18.1	1.30	19.1	0.70
77	15.1	2.50	18.6	2.10	20.9	1.30	21.8	0.70
75	17.3	2.50	20.5	2.00	22.7	1.25	23.5	0.70
73	19.4	2.50	22.3	1.85	24.5	1.25	25.2	0.70
70	22.4	2.35	25.0	1.70	27.0	1.20	27.6	0.70
68	24.3	2.10	26.8	1.55	28.7	1.20	29.1	0.70
65	26.8	1.65	29.4	1.40	31.1	1.15	31.3	0.70
63	28.3	1.25	30.8	1.10	32.5	1.10	32.7	0.70
60	30.5	0.70						
Critical boom angle(°)	59		62		62		62	
Parts of line	1							
Standard hook	For 5t							
Hook mass (kg)	120							

LIFTING CAPACITIES (16)

44.5m Boom+12.9m SL Jib								
Outriggers intermediately extended (6.5m) over side								
Boomangle (°)	Offset 7°		Offset 25°		Offset 45°		Offset 60°	
	Working radius (m)	Load (ton)	Working radius (m)	Load (ton)	Working radius (m)	Load (ton)	Working radius (m)	Load (ton)
84	6.9	2.50	11.3	2.40	14.1	1.30	15.5	0.70
80	11.6	2.50	15.5	2.25	18.1	1.30	19.1	0.70
77	15.1	2.50	18.6	2.10	20.9	1.30	21.8	0.70
75	17.3	2.50	20.5	2.00	22.7	1.25	23.5	0.70
73	19.4	2.50	22.3	1.85	24.5	1.25	25.2	0.70
70	22.4	2.35	25.0	1.70	27.0	1.20		
68	24.0	1.85	26.8	1.55	28.7	1.20		
65	26.3	1.20	29.0	1.00	30.9	0.90		
Critical boom angle(°)	64		64		64		72	
Parts of line	1							
Standard hook	For 5t							
Hook mass (kg)	120							

LIFTING CAPACITIES (17)

44.5m Boom+12.9m SL Jib								
Outriggers intermediately extended (5.4m) over side								
Boomangle (°)	Offset 7°		Offset 25°		Offset 45°		Offset 60°	
	Working radius (m)	Load (ton)	Working radius (m)	Load (ton)	Working radius (m)	Load (ton)	Working radius (m)	Load (ton)
84	6.9	2.50	11.3	2.40	14.1	1.30	15.5	0.70
80	11.6	2.50	15.5	2.25	18.1	1.30	19.1	0.70
77	15.1	2.50	18.6	2.10	20.9	1.30	21.8	0.70
75	17.3	2.50	20.5	2.00	22.7	1.25	23.5	0.70
73	19.3	2.50	22.3	1.85	24.5	1.25	25.2	0.70
70	21.8	1.50						
Critical boom angle(°)	69		72		72		72	
Parts of line	1							
Standard hook	For 5t							
Hook mass (kg)	120							

LIFTING CAPACITIES (18)

44.5m Boom+12.9m SL Jib								
Outriggers intermediately extended (4.3m) over side								
Boomangle (°)	Offset 7°		Offset 25°		Offset 45°		Offset 60°	
	Working radius (m)	Load (ton)	Working radius (m)	Load (ton)	Working radius (m)	Load (ton)	Working radius (m)	Load (ton)
84	6.9	2.50	11.3	2.40	14.1	1.30	15.5	0.70
80	11.6	2.50	15.5	2.25	18.1	1.30	19.1	0.70
77	15.1	2.50	18.6	2.10	20.9	1.30	21.8	0.70
Critical boom angle(°)	76		76		76		76	
Parts of line	1							
Standard hook	For 5t							
Hook mass (kg)	120							

LIFTING CAPACITIES (19)

44.5m Boom+12.9m SL Jib								
Outriggers extended over front								
Boomangle (°)	Offset 7°		Offset 25°		Offset 45°		Offset 60°	
	Working radius (m)	Load (ton)	Working radius (m)	Load (ton)	Working radius (m)	Load (ton)	Working radius (m)	Load (ton)
84	6.9	2.50	11.3	2.40	14.1	1.30	15.7	0.70
80	11.6	2.50	15.5	2.25	18.1	1.30	19.1	0.70
77	15.1	2.50	18.6	2.10	20.9	1.30	21.8	0.70
75	17.3	2.50	20.5	2.00	22.7	1.25	23.5	0.70
73	19.4	2.50	22.3	1.85	24.5	1.25	25.2	0.70
70	22.4	2.35	25.0	1.70	27.0	1.20	27.6	0.70
68	24.3	2.10	26.8	1.55	28.7	1.20	29.1	0.70
65	27.0	1.90	29.4	1.40	31.1	1.15	31.3	0.70
63	28.7	1.70	31.1	1.30	32.6	1.10	32.7	0.70
60	31.1	1.45	33.5	1.20	34.8	1.05		
57	33.5	1.30	35.7	1.10	36.8	1.00		
54	35.8	1.15	37.8	0.95	38.7	0.90		
51	38.0	1.00	39.8	0.85	40.5	0.80		
49	39.3	0.75	41.0	0.75	41.6	0.75		
Critical boom angle(°)	48		48		48		62	
Parts of line	1							
Standard hook	For 5t							
Hook mass (kg)	120							

LIFTING CAPACITIES (20)

44.5m Boom+17.5m SL Jib								
Outriggers fully extended (7.6m) over side and over rear								
Boomangle (°)	Offset 7°		Offset 25°		Offset 45°		Offset 60°	
	Working radius (m)	Load (ton)	Working radius (m)	Load (ton)	Working radius (m)	Load (ton)	Working radius (m)	Load (ton)
84	8.0	1.50	13.7	1.00	18.1	0.70	19.9	0.35
80	12.9	1.40	18.2	0.90	22.1	0.65	23.6	0.35
77	16.5	1.25	21.3	0.85	25.0	0.60	26.3	0.35
75	18.7	1.20	23.4	0.85	26.9	0.60	28.0	0.35
73	20.9	1.15	25.5	0.80	28.7	0.60	29.7	0.35
70	24.1	1.05	28.6	0.80	31.3	0.55	32.0	0.35
68	26.2	1.00	30.5	0.75	33.1	0.55	33.5	0.35
65	29.3	0.95	33.2	0.70	35.5	0.55	35.8	0.35
63	31.3	0.90	35.0	0.70	37.1	0.55	37.2	0.35
60	34.1	0.70	37.5	0.55	39.3	0.50		
Critical boom angle(°)	59		59		59		62	
Parts of line	1							
Standard hook	For 5t							
Hook mass (kg)	120							

LIFTING CAPACITIES (21)

44.5m Boom+17.5m SL Jib								
Outriggers intermediately extended (7.2m) over side								
Boomangle (°)	Offset 7°		Offset 25°		Offset 45°		Offset 60°	
	Working radius (m)	Load (ton)	Working radius (m)	Load (ton)	Working radius (m)	Load (ton)	Working radius (m)	Load (ton)
84	8.0	1.50	13.7	1.00	18.1	0.70	19.9	0.35
80	12.9	1.40	18.2	0.90	22.1	0.65	23.6	0.35
77	16.5	1.25	21.3	0.85	25.0	0.60	26.3	0.35
75	18.7	1.20	23.4	0.85	26.9	0.60	28.0	0.35
73	20.9	1.15	25.5	0.80	28.7	0.60	29.7	0.35
70	24.1	1.05	28.6	0.80	31.3	0.55	32.0	0.35
68	26.2	1.00	30.5	0.75	33.1	0.55	33.5	0.35
65	29.3	0.95	33.2	0.70	35.5	0.55	35.8	0.35
63	31.3	0.90	35.0	0.70	37.1	0.55	37.2	0.35
Critical boom angle(°)	62		62		62		62	
Parts of line	1							
Standard hook	For 5t							
Hook mass (kg)	120							

LIFTING CAPACITIES (22)

44.5m Boom+17.5m SL Jib								
Outriggers intermediately extended (6.5m) over side								
Boomangle (°)	Offset 7°		Offset 25°		Offset 45°		Offset 60°	
	Working radius (m)	Load (ton)	Working radius (m)	Load (ton)	Working radius (m)	Load (ton)	Working radius (m)	Load (ton)
84	8.0	1.50	13.7	1.00	18.1	0.70	19.9	0.35
80	12.9	1.40	18.2	0.90	22.1	0.65	23.6	0.35
77	16.5	1.25	21.3	0.85	25.0	0.60	26.3	0.35
75	18.7	1.20	23.4	0.85	26.9	0.60	28.0	0.35
73	20.9	1.15	25.5	0.80	28.7	0.60	29.7	0.35
70	24.1	1.05	28.6	0.80	31.3	0.55	32.0	0.35
68	26.2	1.00	30.5	0.75	33.1	0.55	33.5	0.35
65	29.3	0.95	33.2	0.70	35.5	0.55	35.8	0.35
Critical boom angle(°)	64		64		64		64	
Parts of line	1							
Standard hook	For 5t							
Hook mass (kg)	120							

LIFTING CAPACITIES (23)

44.5m Boom+17.5m SL Jib								
Outriggers intermediately extended (5.4m) over side								
Boomangle (°)	Offset 7°		Offset 25°		Offset 45°		Offset 60°	
	Working radius (m)	Load (ton)	Working radius (m)	Load (ton)	Working radius (m)	Load (ton)	Working radius (m)	Load (ton)
84	8.0	1.50	13.7	1.00	18.1	0.70	19.9	0.35
80	12.9	1.40	18.2	0.90	22.1	0.65	23.6	0.35
77	16.5	1.25	21.3	0.85	25.0	0.60	26.3	0.35
75	18.7	1.20	23.4	0.85	26.9	0.60	28.0	0.35
73	20.9	1.15	25.5	0.80	28.7	0.60	29.7	0.35
Critical boom angle(°)	72		72		72		72	
Parts of line	1							
Standard hook	For 5t							
Hook mass (kg)	120							

Winch system	
Main winch Auxiliary winch	: Driven by axial plunger type hoisting motor through planetary gear reduction. Controlled independently by respective operating lever. Equipped with automatic brake.
Safety devices	: ACS (Automatic Crane Stopper with Voice alarm) Slewing automatic stop system Boom raise / lower dampening function Boom extension / retraction dampening function Woking range limit mode Outrigger status detector Boom derricking / telescoping holding valve Overhoist prevention device Drum lock device (on aux. winch) Winch holding valve Automatic winch brake Winch drum roller Hydraulic safety valves Outrigger lock pins Slewing lock Slewing warning lamp Hydraulic oil temperature warning device Hydraulic oil return filter warning device
Operator's cab	: Hydraulic cab suspension Adjustable steering wheel Adjustable suspension seat Power Window(external closing switch) Front windscreen wiper & washer (2 speed wiper) Roof window wiper & washer Tea table Cigarette lighter Access step light Fire extinguisher Floor mat AM/FM Radio
Standard equipment	: Air conditioner(with cold/warm box) Hydraulic oil cooler Working light (on boom, table and cab) Winch drum turning indication device Hook for 70 / 48 ton Hook for 34 ton Hook for 5 ton Winch view camera Rear view camera Side view camera
Optional equipment	: ACS outside indicator PA system Door visor Searchlight Anemometer

Spec.No.5210000200

LIFTING CAPACITIES (24)

44.5m Boom+17.5m SL Jib								
Outriggers intermediately extended (4.3m) over side								
Boomangle (°)	Offset 7°		Offset 25°		Offset 45°		Offset 60°	
	Working radius (m)	Load (ton)	Working radius (m)	Load (ton)	Working radius (m)	Load (ton)	Working radius (m)	Load (ton)
84	8.0	1.50	13.7	1.00	18.1	0.70	19.9	0.35
80	12.9	1.40	18.2	0.90	22.1	0.65	23.6	0.35
77	16.5	1.25	21.3	0.85	25.0	0.60	26.3	0.35
Critical boom angle(°)	76		76		76		76	
Parts of line	1							
Standard hook	For 5t							
Hook mass (kg)	120							

LIFTING CAPACITIES (25)

44.5m Boom+17.5m SL Jib								
Outriggers extended over front								
Boomangle (°)	Offset 7°		Offset 25°		Offset 45°		Offset 60°	
	Working radius (m)	Load (ton)	Working radius (m)	Load (ton)	Working radius (m)	Load (ton)	Working radius (m)	Load (ton)
84	8.0	1.50	13.7	1.00	18.1	0.70	19.9	0.35
80	12.9	1.40	18.2	0.90	22.1	0.65	23.6	0.35
77	16.5	1.25	21.3	0.85	25.0	0.60	26.3	0.35
75	18.7	1.20	23.4	0.85	26.9	0.60	28.0	0.35
73	20.9	1.15	25.5	0.80	28.7	0.60	29.7	0.35
70	24.1	1.05	28.6	0.80	31.3	0.55	32.0	0.35
68	26.2	1.00	30.5	0.75	33.1	0.55	33.5	0.35
65	29.3	0.95	33.2	0.70	35.5	0.55	35.8	0.35
63	31.3	0.90	35.0	0.70	37.1	0.55	37.2	0.35
60	34.2	0.85	37.5	0.65	39.3	0.50		
57	36.9	0.85	39.9	0.65	41.4	0.50		
54	39.4	0.80	42.2	0.60	43.4	0.50		
51	41.9	0.75	44.4	0.60	45.1	0.50		
49	43.2	0.55	45.7	0.55				
Critical boom angle(°)	48		48		50		62	
Parts of line	1							
Standard hook	For 5t							
Hook mass (kg)	120							

Notes for the lifting capacity chart

When the outriggers are used

1. The lifting capacity is based on Japanese Standard.

2. The lifting capacity chart indicates the maximum load which can be lifted by this crane provided it is level and standing on firm level ground. The values in the chart include the mass of the main hook and slings for boom operation, and auxiliary hook and slings for jib operation. [70 ton hook (mass: 530 kg), 48 ton hook (mass: 470 kg), 34 ton hook (mass: 330 kg), 5 ton hook (mass: 120 kg)]
   Within the chart the figures in the area bordered with a thick line are based on structural limitations while other figures are determined by stability limitations.

3. The working radii are the actual values allowing for boom and jib deflection. Therefore you must always operate the crane on the basis of the working radius.

4. The jib working radius is based on the jib mounted on the end of the 44.5 m boom. When operating at other boom lengths, use the boom angle alone as the criterion.

5. Do not operate the jib when the outriggers are completely retracted.

6. The lifting capacities for the over sides vary with the outriggers extension width. Therefore for each outriggers extension condition you should work according the lifting capacity chart. Use the front area lifting capacity chart for the front area lifting work, and use the lifting capacity chart of outriggers full extension for the rear area lifting work.

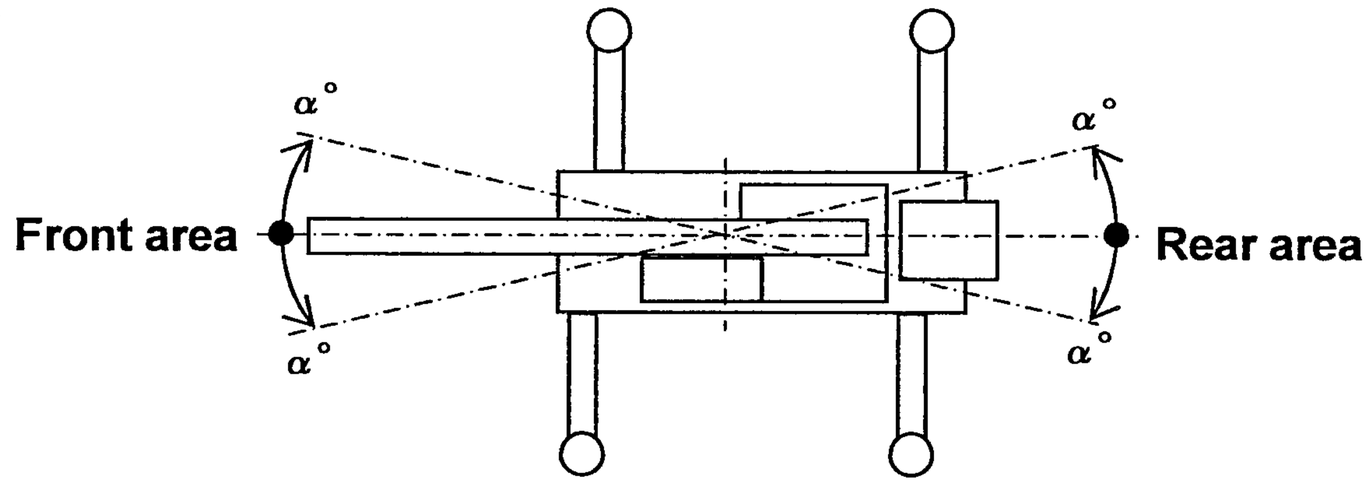

Outrigger extension status	Full extension (7.6m)	Intermediate extension (7.2—5.4m)	Intermediate extension (4.3m)	Full retraction
Area α°	Only front area 40	30	15	3

7. The lifting capacity of the rooster sheave is the lifting capacity of the boom minus the mass of all attached hook, slings etc. to the boom, with an upper limit of 5,000 kg.
   [The hook for use with the rooster sheave is the 5 ton hook (mass: 120 kg) with one part of line.]

8. If the boom length, boom angle, jib length, jib angle and/or working radius exceeds the rated value, use the lifting capacity for the rated value or for the next one, whichever gives the smaller lifting capacity.

9. If you are working with the boom while the jib is rigged, subtract 4,300 kg plus the mass of all attached hook, slings, etc. to the boom from the each lifting capacity of the boom, with an upper limit of 18 ton.
   Do not use the rooster sheave in this situation. And do not operate the boom while the jib is rigged, when the outriggers are retracted.
   [The main hook for use with the jib rigged is 34 ton hook (mass: 330 kg).]

10. In whatever working conditions the corresponding boom critical angle is shown in the chart. The crane can tip over if the boom is lowered below the critical angle even if unloaded. Therefore, never lower the boom below these angles.

11. If you are work with 16 parts of line on the hook (with * marked in the lifting capacity chart), use the rooster sheave and sheave bracket.

    [The main hook for use with the sheave bracket is the 70 ton hook (mass: 530 kg).]

12. The standard parts of line for each boom length are as indicated in the chart. If you work with a non-standard number of parts of line, do not exceed 45.1 kN (4.6 tf) per wire rope respectively.

13. Crane operation is permissible up to a wind speed of 10 m/s. Even in relatively light wind conditions, extra care should be taken when handling loads presenting large wind catching areas.

14. If you work with a load in excess of the lifting capacity or use incorrect working procedures, you are risking damaging the crane or tipping it over. In such cases, the crane will not be guaranteed.

Spec.No.5210000200

LIFTING CAPACITIES (1)

(Unit : Metric ton)

Stationary on rubber						
Working radius(m)	10.0m Boom		16.9m Boom		23.8m Boom	
	Over front	360° full range	Over front	360° full range	Over front	360° full range
3.5	16.00	9.00	13.00	6.50	8.00	4.00
4.0	16.00	7.00	13.00	6.50	8.00	4.00
4.5	14.60	5.70	13.00	5.60	8.00	4.00
5.0	13.40	4.60	13.00	4.60	8.00	4.00
5.5	12.20	3.80	12.00	3.80	8.00	3.50
6.0	11.20	3.20	11.00	3.10	8.00	3.00
6.5	10.20	2.70	10.00	2.60	7.60	2.60
7.0	9.30	2.20	9.20	2.20	7.30	2.20
7.5			8.40	1.80	7.00	
8.0			7.80	1.40	6.70	
8.5			7.00	1.10	6.50	
9.0			6.30		6.00	
10.0			5.10		5.00	
11.0			4.20		4.10	
12.0			3.50		3.40	
13.0			2.90		2.80	
14.0					2.30	
15.0					1.85	
16.0					1.45	
17.0					1.10	
18.0					0.80	
Critical boom angle(°)	—	–	–	49	30	68
Parts of line	4		4		4	
Standard hook	for 34t					
Hook mass (kg)	330					

Spec.No.5210000200

LIFTING CAPACITIES (2)

(Unit : Metric ton)

Pick & carry (less than 2 km/h)						
Working radius(m)	10.0m Boom		16.9m Boom		23.8m Boom	
	Over front	360° full range	Over front	360° full range	Over front	360° full range
3.5	12.00	7.00	8.50	5.50	7.00	2.70
4.0	11.00	5.70	8.50	4.80	7.00	2.70
4.5	10.00	4.60	8.50	4.20	7.00	2.70
5.0	9.00	3.80	8.50	3.60	7.00	2.70
5.5	8.10	3.20	7.80	3.00	7.00	2.70
6.0	7.30	2.60	7.10	2.50	7.00	2.30
6.5	6.60	2.10	6.40	2.00	6.30	1.90
7.0	5.90	1.70	5.80	1.60	5.70	1.50
7.5			5.20	1.15	5.10	
8.0			4.70	0.75	4.65	
8.5			4.20		4.15	
9.0			3.75		3.70	
10.0			3.00		2.95	
11.0			2.35		2.30	
12.0			1.75		1.70	
13.0			1.25		1.20	
14.0					0.80	
Critical boom angle(°)	—	–	–	52	45	68
Parts of line	4		4		4	
Standard hook	for 34t					
Hook mass (kg)	330					

When the outriggers are not used

1. The lifting capacity chart indicates the maximum load the crane can lift when its body is level on firm level ground with all tires inflated to the rated pressure and the suspension cylinder completely retracted. The values in the chart include the mass of the main hook and slings.
   Within the chart the figures in the area bordered with a thick line are based on structural limitations while other figures are determined by stability limitations.
   [Rated tire pressure: 900 kPa (9.0 kgf/cm^2)]

2. The working radii are the actual values allowing for boom deflection. Therefore you must always operate the crane on the basis of the working radius.

3. The lifting capacity differs between the front area capacity and the full range capacity. When slewing from the front to the side, take care that the crane could not be over loaded.

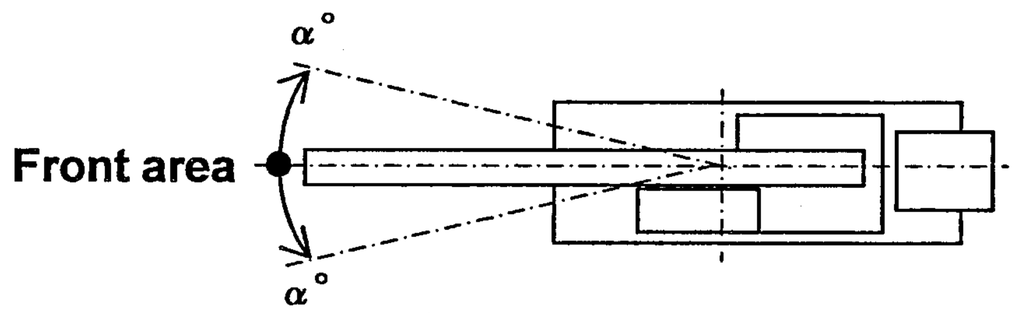

Crane operation	Stationary crane-on-rubber operation	Pick and carry operation
Area α°	1	1

4. The lifting capacity of the rooster sheave is the lifting capacity of the boom minus the mass of 34 ton hook (mass: 330 kg), with an upper limit of 5,000 kg.
   [The hook for use with the rooster sheave is the 5 ton hook (mass: 120 kg) with one part of line.]

5. Do not work with the jib or with a boom length of more than 23.8 m.

6. For stationary crane-on-rubber operation, the parking brake and brake lock device must be engaged.

7. For pick and carry operation, the ultra-slow switch must be switched to "ON" and the shift lever set to speed 1.

8. For pick and carry operation, lower the load to just above the ground and keep your speed strictly below 2 km/h to avoid swinging the load.
   Take particular care to avoid sharp turns, sudden starts and stops.

9. Never operate the crane during pick and carry operation. The slewing brake must be applied.

10. If the boom length, boom angle, jib length, jib angle and/or working radius exceeds the rated value, use the lifting capacity for the rated value or for the next one, whichever gives the smaller lifting capacity.

11. In whatever working conditions the corresponding boom critical angle is shown in the chart. The crane can tip over if the boom is lowered below the critical angle even if unloaded. Therefore, never lower the boom below these angles.

12. The standard parts of line for each boom length are as indicated in the chart. If you work with a non-standard number of parts of line, do not exceed 45.1 kN (4.6 tf) per wire rope respectively.

13. Crane operation is permissible up to a wind speed of 10 m/s. Even in relatively light wind conditions, extra care should be taken when handling loads presenting large wind catching areas.

14. If you work with a load in excess of the rated lifting capacity or use incorrect working procedures, you are risking damaging the crane or tipping it over. In such cases, the crane will not be guaranteed.

WORKING RANGE

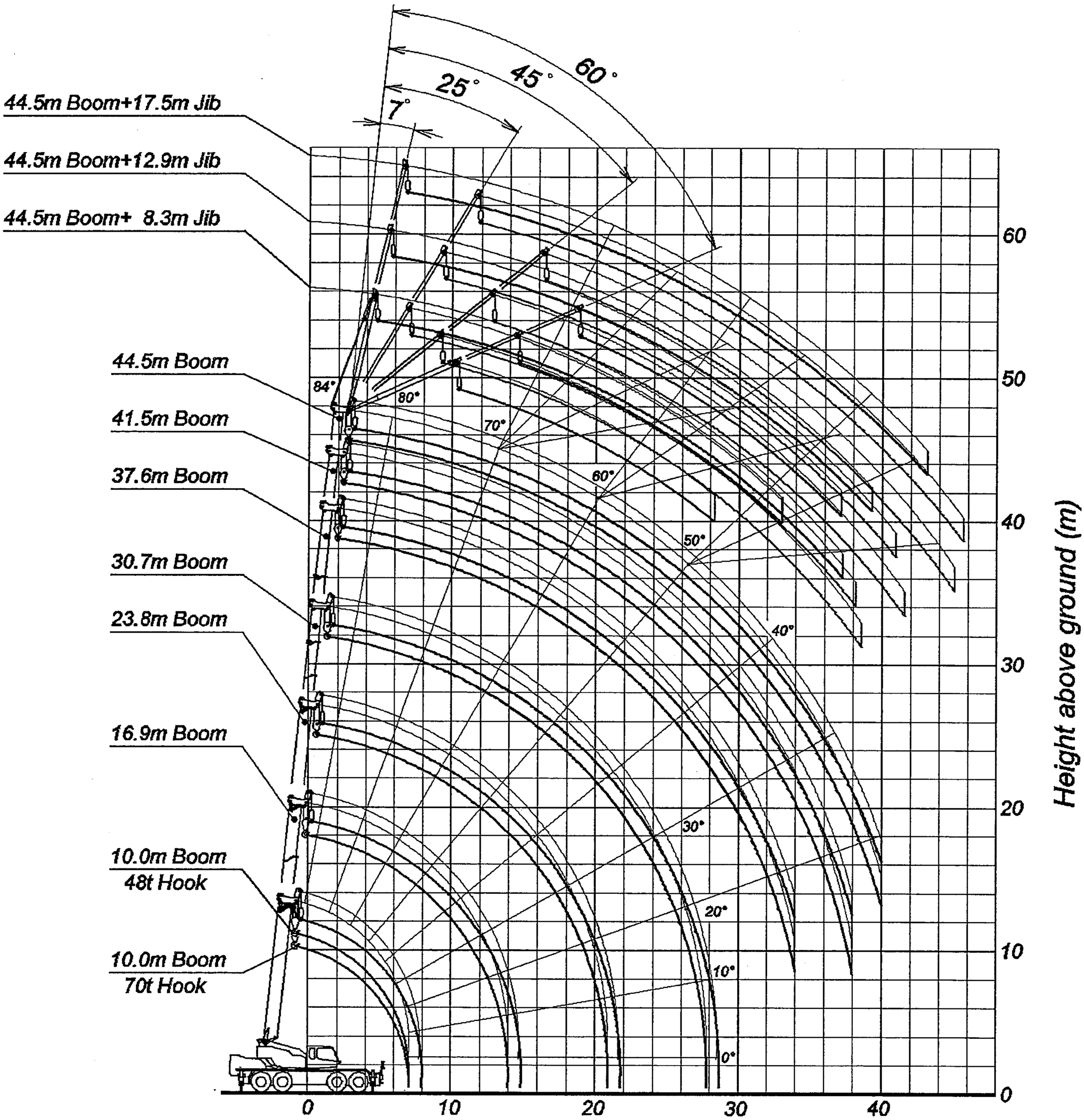

Note:1.This diagram does not include deflection of Boom and Fly jib.
2.The outriggers are extended (over front).

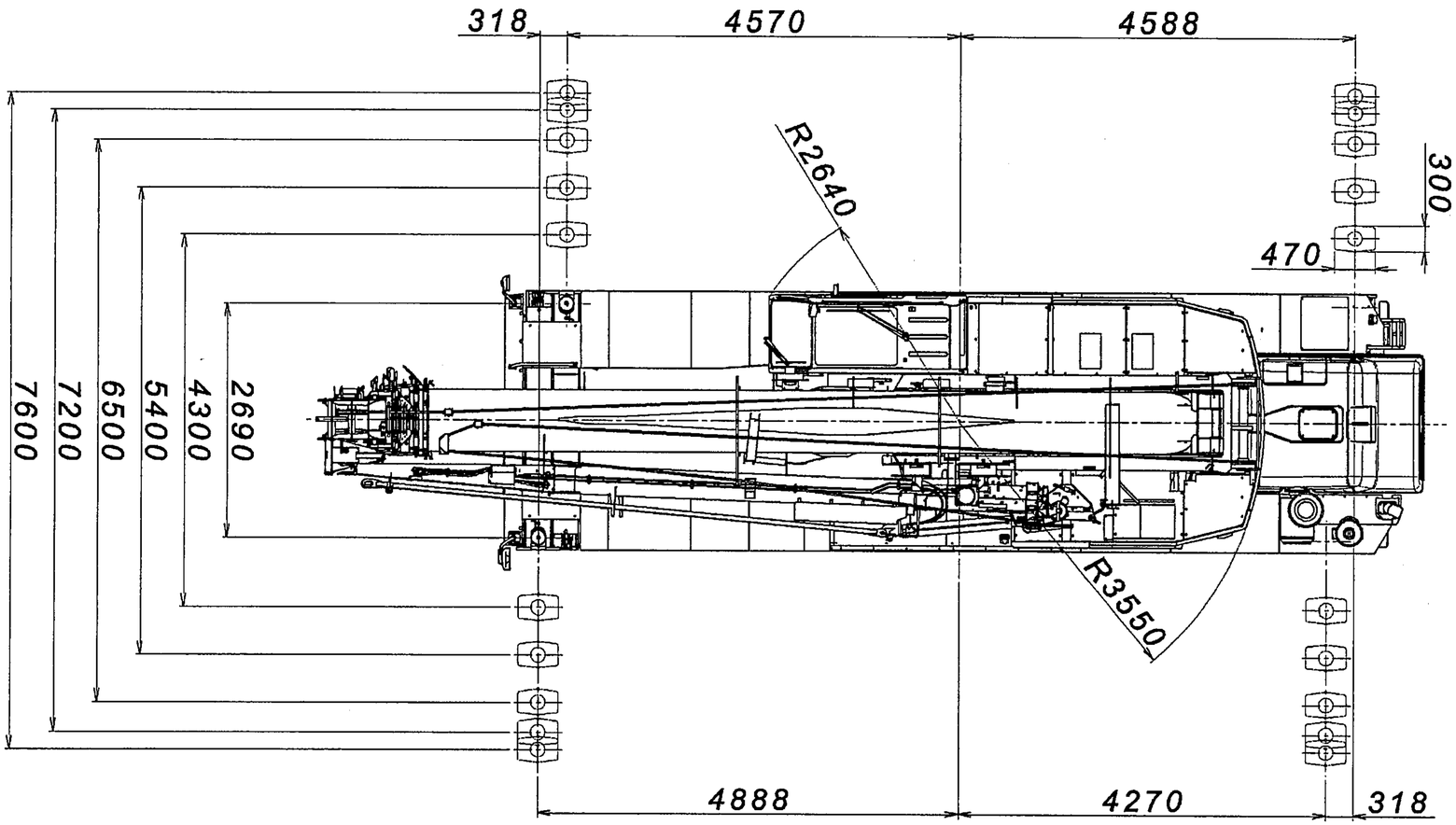

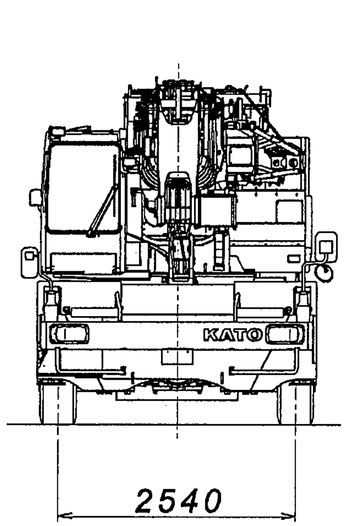

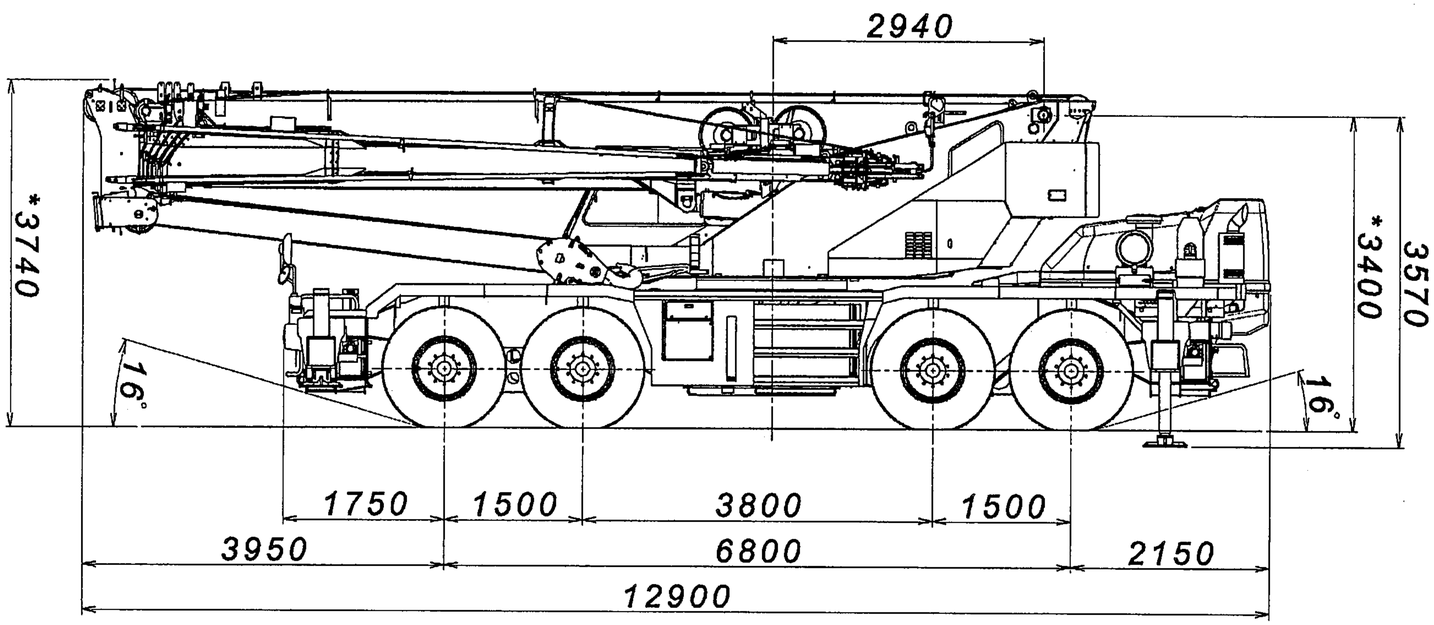

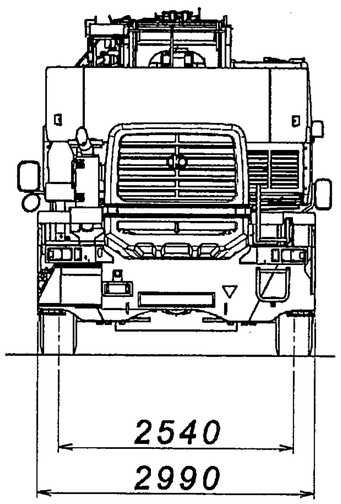

KATO FULLY HYDRAULIC ROUGH TERRAIN CRANE MODEL SL-700R

***With suspension cylinders retracted :-85mm**

Spec. No.5210000200

SL-700R O/R Max. Reaction Force (Calculation Value)

(Unit: Metric ton)

O/R Max.(7.6m) Ext. (side area rear area)														
Working radius (m)	10.0m Boom		16.9m Boom		23.8m Boom		30.7m Boom		37.6m Boom		41.5m Boom		44.5m Boom	
	Rated Lifting Capacity	O/R Reaction Force	Rated Lifting Capacity	O/R Reaction Force	Rated Lifting Capacity	O/R Reaction Force	Rated Lifting Capacity	O/R Reaction Force	Rated Lifting Capacity	O/R Reaction Force	Rated Lifting Capacity	O/R Reaction Force	Rated Lifting Capacity	O/R Reaction Force
2.5	70.00	51.3	32.00	29.3	25.00	25.3	12.50	17.8						
3.0	61.00	50.1	32.00	31.5	25.00	27.1	12.50	18.8						
3.5	55.00	50.1	32.00	33.8	25.00	28.9	12.50	19.7	12.00	19.1				
4.0	49.20	49.5	32.00	36.2	25.00	30.8	12.50	20.7	12.00	20.0	10.00	18.4		
4.5	44.10	48.8	32.00	38.6	25.00	32.8	12.50	21.7	12.00	20.9	10.00	19.2	8.00	17.5
5.0	39.50	47.9	32.00	41.1	25.00	34.8	12.50	22.7	12.00	21.9	10.00	20.2	8.00	18.1
5.5	35.70	47.2	32.00	43.8	25.00	36.9	12.50	23.8	12.00	22.9	10.00	20.8	8.00	18.8
6.0	32.50	46.6	32.00	46.4	23.40	37.2	12.50	24.9	12.00	23.9	10.00	21.6	8.00	19.5
6.5	29.50	45.8	29.00	45.7	22.00	37.7	12.50	26.0	12.00	24.9	10.00	22.5	8.00	20.2
7.0	26.80	45.1	26.40	44.9	20.70	38.0	12.50	27.1	12.00	25.9	10.00	23.4	8.00	20.9
7.5			24.00	44.1	19.50	38.4	12.50	28.3	12.00	27.0	10.00	24.3	8.00	21.7
8.0			22.00	43.5	18.50	38.8	12.50	29.4	12.00	28.1	10.00	25.2	8.00	22.4
9.0			18.10	41.6	16.60	39.5	12.50	31.8	12.00	30.3	10.00	27.0	8.00	23.9
10.0			14.60	39.2	14.40	39.1	12.50	34.3	12.00	32.6	10.00	28.9	8.00	25.5
11.0			12.00	37.4	11.80	37.3	12.00	36.0	11.10	33.3	10.00	30.9	8.00	27.1
12.0			10.00	36.0	9.80	35.9	10.90	36.4	10.20	33.8	9.40	31.8	8.00	28.8
13.0			8.40	34.9	8.20	34.8	9.30	35.3	9.40	34.3	8.70	32.3	8.00	30.5
14.0					7.00	34.2	8.00	34.4	8.50	34.3	8.00	32.6	7.50	31.1
15.0					5.95	33.5	6.90	33.7	7.50	33.8	7.50	33.2	7.00	31.6
16.0					5.10	33.1	6.05	33.2	6.60	33.2	6.80	33.2	6.60	32.3
17.0					4.35	32.7	5.30	32.8	5.80	32.7	6.05	32.8	6.20	32.8
18.0					3.65	32.2	4.65	32.5	5.15	32.3	5.40	32.4	5.50	32.3
19.0					3.00	31.6	4.05	32.1	4.60	32.1	4.80	32.0	4.95	32.0
20.0					2.45	31.2	3.55	31.9	4.10	31.9	4.30	31.8	4.45	31.8
21.0							3.05	31.5	3.65	31.7	3.85	31.6	4.00	31.6
22.0							2.60	31.1	3.20	31.3	3.45	31.4	3.60	31.4
24.0							1.85	30.6	2.45	30.8	2.70	30.8	2.90	31.0
26.0							1.25	30.2	1.80	30.2	2.05	30.3	2.25	30.5
28.0									1.30	29.9	1.55	30.0	1.70	30.0
30.0									0.90	29.7	1.10	29.6	1.30	29.8
32.0											0.75	29.5	0.90	29.5
33.0											0.60	29.4	0.75	29.5
34.0													0.60	29.5

2. Carrier Specification

Drive system		: 8 × 4 , 8 × 6
Maximum traveling speed		: 49 km/h
Grade ability (tanθ)		: 54 % (computed at G.V.W. = 41145 kg)
Minimum turning radius (center of extreme outer tire)		: 6.84 m (8 wheel steer) 11.6 m (4 wheel steer)
Engine		
Maker		: Mitsubishi
Model		: 6M70-TLE3A
Type		: 4 cycle, 6 cylinders, water cooled, direct injection turbo-charged diesel engine with intercooling
Piston displacement		: 12.882 L
Max. power		: 272 kW at 2000 min^{-1}
Max. torque		: 1510 N·m at 1600 min^{-1}
Torque converter		: Engine mounted 3 elements 1 stage (with lock up clutch)
Transmission		: Remote mounted full automatic 6 forward & 2 reverse speed
Axles;	Front-Front 1	: Planetary, drive/steer type,Reverse "ELLIOT"type
	Front-Rear 2	: Planetary, drive/steer type,Reverse "ELLIOT"type
	Rear-Front 3	: Steer type,Reverse "ELLIOT"type
	Rear-Rear 4	: Planetary, drive/steer type,Reverse "ELLIOT"type
Suspension;	Front & Rear	: Hydro-pneumatic suspension Hydraulic locking device with suspension cylinder
Steering		: Full hydraulic power steering Completely independent front and rear steering (with automatic rear wheel steering lock system)
Brake system;	Service brake	: 2 circuit brake 8 wheels internal expanding type
	Parking brake	: Spring applied, electrically air released parking brake (2 & 3 Axles)
	Auxiliary brake	: Engine brake(Decompression brake) Hydraulic retarder
Electric system		: 24 V
Alternator		: 24 V – 90 A
Batteries		: (12 V – 150 AH) × 2
Fuel tank capacity		: 370 L

SL-700R O/R Max. Reaction Force (Calculation Value)

(Unit: Metric ton)

O/R Medium(7.2m) Ext. (side area)														
Working radius (m)	10.0m Boom		16.9m Boom		23.8m Boom		30.7m Boom		37.6m Boom		41.5m Boom		44.5m Boom	
	Rated Lifting Capacity	O/R Reaction Force	Rated Lifting Capacity	O/R Reaction Force	Rated Lifting Capacity	O/R Reaction Force	Rated Lifting Capacity	O/R Reaction Force	Rated Lifting Capacity	O/R Reaction Force	Rated Lifting Capacity	O/R Reaction Force	Rated Lifting Capacity	O/R Reaction Force
2.5	55.00	43.0	32.00	29.5	25.00	25.5	12.50	17.9						
3.0	55.00	46.8	32.00	31.8	25.00	27.4	12.50	18.8						
3.5	50.00	47.2	32.00	34.2	25.00	29.3	12.50	19.8	12.00	19.2				
4.0	46.00	47.7	32.00	36.7	25.00	31.2	12.50	20.9	12.00	20.1	10.00	18.5		
4.5	42.00	47.8	32.00	39.2	25.00	33.3	12.50	21.9	12.00	21.1	10.00	19.3	8.00	17.6
5.0	38.50	47.8	32.00	41.9	25.00	35.3	12.50	23.0	12.00	22.1	10.00	20.1	8.00	18.3
5.5	35.00	47.3	32.00	44.6	25.00	37.5	12.50	24.1	12.00	23.1	10.00	21.0	8.00	19.0
6.0	32.00	47.0	32.00	47.4	23.40	37.9	12.50	25.2	12.00	24.1	10.00	21.9	8.00	19.7
6.5	29.50	46.8	29.00	46.6	22.00	38.4	12.50	26.3	12.00	25.2	10.00	22.7	8.00	20.4
7.0	26.80	46.0	26.40	45.9	20.70	38.8	12.50	27.5	12.00	26.3	10.00	23.7	8.00	21.2
7.5			24.00	45.1	19.50	39.1	12.50	28.7	12.00	27.4	10.00	24.6	8.00	21.9
8.0			21.10	43.1	18.50	39.6	12.50	29.9	12.00	28.5	10.00	25.5	8.00	22.7
9.0			16.40	39.7	16.30	39.8	12.50	32.4	12.00	30.8	10.00	27.4	8.00	24.3
10.0			13.20	37.5	13.10	37.6	12.50	35.0	12.00	33.2	10.00	29.4	8.00	25.9
11.0			10.80	35.9	10.70	36.0	11.80	36.4	11.10	34.0	10.00	31.5	8.00	27.6
12.0			9.00	34.7	8.80	34.6	9.90	35.1	10.20	34.5	9.40	32.4	8.00	29.3
13.0			7.60	33.9	7.40	33.8	8.40	34.0	9.00	34.1	8.70	33.0	8.00	31.1
14.0					6.30	33.2	7.20	33.2	7.80	33.4	8.00	33.3	7.50	31.8
15.0					5.30	32.6	6.30	32.9	6.85	32.9	7.00	32.7	7.00	32.3
16.0					4.50	32.2	5.45	32.3	6.00	32.3	6.25	32.4	6.40	32.4
17.0					3.80	31.8	4.75	32.0	5.30	32.0	5.50	31.9	5.70	32.0
18.0					3.10	31.2	4.15	31.7	4.65	31.5	4.90	31.6	5.05	31.6
19.0					2.50	30.7	3.60	31.4	4.10	31.2	4.35	31.3	4.50	31.3
20.0					2.00	30.4	3.05	30.9	3.65	31.1	3.85	31.0	4.05	31.1
21.0							2.60	30.6	3.20	30.8	3.45	30.8	3.60	30.9
22.0							2.20	30.3	2.80	30.5	3.05	30.6	3.25	30.8
24.0							1.50	29.8	2.05	29.8	2.35	30.1	2.50	30.1
26.0							0.95	29.5	1.55	29.7	1.75	29.6	1.90	29.6
28.0									1.05	29.3	1.30	29.5	1.45	29.5
30.0									0.65	29.1	0.85	29.0	1.00	29.0
32.0													0.65	28.8

SL-700R O/R Max. Reaction Force (Calculation Value)

(Unit: Metric ton)

O/R Medium(6.5m) Ext.(side area)														
Working radius (m)	10.0m Boom		16.9m Boom		23.8m Boom		30.7m Boom		37.6m Boom		41.5m Boom		44.5m Boom	
	Rated Lifting Capacity	O/R Reaction Force	Rated Lifting Capacity	O/R Reaction Force	Rated Lifting Capacity	O/R Reaction Force	Rated Lifting Capacity	O/R Reaction Force	Rated Lifting Capacity	O/R Reaction Force	Rated Lifting Capacity	O/R Reaction Force	Rated Lifting Capacity	O/R Reaction Force
2.5	50.00	40.9	32.00	30.1	25.00	25.9	12.50	18.0						
3.0	50.00	44.7	32.00	32.5	25.00	27.9	12.50	19.0						
3.5	46.00	45.5	32.00	35.1	25.00	29.9	12.50	20.1	12.00	19.4				
4.0	42.00	45.9	32.00	37.8	25.00	32.1	12.50	21.2	12.00	20.4	10.00	18.7		
4.5	38.00	45.7	32.00	40.5	25.00	34.2	12.50	22.3	12.00	21.5	10.00	19.6	8.00	17.7
5.0	34.50	45.5	32.00	43.3	25.00	36.5	12.50	23.5	12.00	22.5	10.00	20.5	8.00	18.5
5.5	31.50	45.3	32.00	46.2	25.00	38.8	12.50	24.6	12.00	23.6	10.00	21.4	8.00	19.3
6.0	29.00	45.3	32.00	49.3	23.40	39.3	12.50	25.9	12.00	24.7	10.00	22.3	8.00	20.0
6.5	25.50	43.6	26.90	45.8	22.00	39.8	12.50	27.1	12.00	25.9	10.00	23.3	8.00	20.8
7.0	22.00	41.4	22.80	42.9	20.70	40.3	12.50	28.3	12.00	27.0	10.00	24.2	8.00	21.6
7.5			19.60	40.6	19.20	40.3	12.50	29.6	12.00	28.2	10.00	25.2	8.00	22.4
8.0			17.10	38.8	17.00	38.9	12.50	30.9	12.00	29.4	10.00	26.2	8.00	23.3
9.0			13.40	36.3	13.30	36.4	12.50	33.6	12.00	31.9	10.00	28.3	8.00	25.0
10.0			10.80	34.6	10.60	34.6	11.70	35.0	12.00	34.5	10.00	30.5	8.00	26.7
11.0			8.80	33.3	8.70	33.4	9.70	33.7	10.40	34.0	10.00	32.7	8.00	28.5
12.0			7.30	32.4	7.20	32.6	8.20	32.8	8.80	32.9	8.90	32.6	8.00	30.4
13.0			6.10	31.8	6.00	31.9	6.95	32.0	7.50	32.0	7.80	32.2	7.70	31.6
14.0					5.00	31.3	5.95	31.5	6.50	31.5	6.70	31.4	6.90	31.5
15.0					4.20	31.0	5.10	31.0	5.65	31.0	5.90	31.1	6.00	30.9
16.0					3.45	30.5	4.40	30.7	4.90	30.6	5.15	30.6	5.30	30.6
17.0					2.75	30.0	3.80	30.4	4.30	30.3	4.55	30.4	4.70	30.4
18.0					2.15	29.5	3.25	30.2	3.75	30.0	4.00	30.1	4.15	30.1
19.0					1.65	29.2	2.75	29.8	3.30	29.8	3.50	29.8	3.65	29.8
20.0					1.20	28.9	2.25	29.4	2.90	29.7	3.10	29.6	3.25	29.6
21.0							1.85	29.1	2.45	29.3	2.70	29.4	2.90	29.6
22.0							1.50	28.9	2.10	29.1	2.35	29.2	2.55	29.4
24.0							0.85	28.4	1.45	28.6	1.70	28.7	1.85	28.7
26.0									0.90	28.1	1.15	28.2	1.35	28.4
28.0											0.70	27.8	0.85	27.8

SL-700R O/R Max. Reaction Force (Calculation Value)

(Unit: Metric ton)

O/R Medium(5.4m) Ext.(side area)														
Working radius (m)	10.0m Boom		16.9m Boom		23.8m Boom		30.7m Boom		37.6m Boom		41.5m Boom		44.5m Boom	
	Rated Lifting Capacity	O/R Reaction Force	Rated Lifting Capacity	O/R Reaction Force	Rated Lifting Capacity	O/R Reaction Force	Rated Lifting Capacity	O/R Reaction Force	Rated Lifting Capacity	O/R Reaction Force	Rated Lifting Capacity	O/R Reaction Force	Rated Lifting Capacity	O/R Reaction Force
2.5	50.00	42.9	32.00	31.2	25.00	26.8	12.50	18.2						
3.0	50.00	47.2	32.00	34.1	25.00	29.1	12.50	19.4						
3.5	46.00	48.4	32.00	37.0	25.00	31.4	12.50	20.7	12.00	19.9				
4.0	42.00	49.0	32.00	40.0	25.00	33.8	12.50	21.9	12.00	21.0	10.00	19.1		
4.5	38.00	48.9	32.00	43.2	25.00	36.3	12.50	23.2	12.00	22.2	10.00	20.1	8.00	18.2
5.0	33.00	47.2	31.50	45.9	25.00	38.9	12.50	24.5	12.00	23.5	10.00	21.2	8.00	19.0
5.5	26.70	42.9	26.30	42.9	23.50	39.7	12.50	25.9	12.00	24.7	10.00	22.2	8.00	19.9
6.0	22.20	39.9	21.70	39.8	20.30	38.2	12.50	27.3	12.00	26.0	10.00	23.3	8.00	20.8
6.5	18.80	37.7	18.30	37.5	17.70	36.9	12.50	28.7	12.00	27.3	10.00	24.4	8.00	21.7
7.0	16.20	36.0	15.70	35.8	15.60	35.9	12.50	30.1	12.00	28.6	10.00	25.5	8.00	22.6
7.5			13.70	34.5	13.60	34.7	12.50	31.6	12.00	30.0	10.00	26.7	8.00	23.5
8.0			12.00	33.5	11.90	33.6	12.50	33.1	12.00	31.4	10.00	27.8	8.00	24.5
9.0			9.40	31.8	9.30	32.0	10.40	32.3	10.40	31.3	10.00	30.2	8.00	26.4
10.0			7.50	30.7	7.40	30.8	8.40	31.1	8.80	30.8	8.80	30.3	8.00	28.4
11.0			6.10	30.0	6.00	30.1	7.00	30.4	7.50	30.3	7.50	29.8	7.50	29.5
12.0			5.00	29.5	4.90	29.7	5.80	29.7	6.35	29.7	6.50	29.5	6.60	29.4
13.0			4.10	29.2	3.95	29.2	4.90	29.3	5.40	29.2	5.60	29.1	5.75	29.1
14.0					3.20	28.9	4.10	28.9	4.60	28.8	4.85	28.8	5.00	28.8
15.0					2.50	28.5	3.45	28.7	3.95	28.5	4.20	28.6	4.35	28.6
16.0					1.85	28.0	2.90	28.5	3.40	28.3	3.60	28.2	3.75	28.2
17.0					1.30	27.6	2.40	28.3	2.90	28.1	3.10	28.0	3.30	28.2
18.0					0.80	27.2	1.90	27.9	2.50	28.0	2.70	27.9	2.85	28.0
19.0							1.45	27.5	2.05	27.7	2.30	27.7	2.45	27.8
20.0							1.05	27.1	1.65	27.3	1.90	27.4	2.10	27.6
21.0							0.75	27.0	1.30	27.0	1.60	27.3	1.80	27.5
22.0									1.00	26.8	1.30	27.1	1.45	27.1

SL-700R O/R Max. Reaction Force (Calculation Value)

(Unit: Metric ton)

O/R Medium(4.3m) Ext.(side area)													
Working radius (m)	10.0m Boom		16.9m Boom		23.8m Boom		30.7m Boom		37.6m Boom		41.5m Boom		44.5m Boom	
	Rated Lifting Capacity	O/R Reaction Force	Rated Lifting Capacity	O/R Reaction Force	Rated Lifting Capacity	O/R Reaction Force	Rated Lifting Capacity	O/R Reaction Force	Rated Lifting Capacity	O/R Reaction Force	Rated Lifting Capacity	O/R Reaction Force	Rated Lifting Capacity	O/R Reaction Force
2.5	40.00	38.6	32.00	33.1	25.00	28.1	12.50	18.6						
3.0	40.00	42.8	32.00	36.5	25.00	30.8	12.50	20.1						
3.5	40.00	47.1	32.00	40.0	25.00	33.7	12.50	21.5	12.00	20.6				
4.0	32.00	43.2	31.00	42.6	25.00	36.5	12.50	23.0	12.00	22.0	10.00	19.8		
4.5	25.70	39.7	25.30	39.7	21.90	36.0	12.50	24.6	12.00	23.4	10.00	21.1	8.00	18.8
5.0	20.60	36.4	20.30	36.5	18.50	34.5	12.50	26.2	12.00	24.9	10.00	22.3	8.00	19.8
5.5	17.00	34.2	16.70	34.3	15.90	33.4	12.50	27.8	12.00	26.4	10.00	23.6	8.00	20.9
6.0	14.40	32.7	14.00	32.6	13.70	32.4	12.50	29.4	12.00	27.9	10.00	24.8	8.00	21.9
6.5	12.30	31.4	11.90	31.3	11.90	31.6	12.00	30.4	12.00	29.5	10.00	26.2	8.00	23.0
7.0	10.70	30.6	10.30	30.4	10.20	30.6	10.90	30.2	10.80	29.2	10.00	27.5	8.00	24.1
7.5			8.90	29.6	8.90	29.9	9.70	29.7	9.70	28.8	10.00	28.9	8.00	25.2
8.0			7.80	29.0	7.70	29.2	8.70	29.3	8.80	28.5	8.80	28.1	8.00	26.4
9.0			6.10	28.3	6.00	28.4	6.90	28.4	7.30	28.1	7.30	27.6	7.40	27.5
10.0			4.80	27.7	4.70	27.9	5.60	27.9	6.10	27.7	6.10	27.2	6.20	27.1
11.0			3.80	27.4	3.65	27.4	4.55	27.4	5.05	27.3	5.20	27.1	5.30	27.0
12.0			3.00	27.2	2.85	27.2	3.70	27.1	4.20	26.9	4.40	26.9	4.50	26.7
13.0			2.30	27.0	2.10	26.8	3.00	26.8	3.50	26.7	3.70	26.6	3.80	26.5
14.0					1.40	26.3	2.45	26.8	2.95	26.6	3.10	26.4	3.25	26.4
15.0							1.90	26.5	2.40	26.3	2.65	26.4	2.75	26.2
16.0							1.40	26.2	2.00	26.3	2.20	26.2	2.30	26.0
17.0									1.60	26.2	1.80	26.0	1.95	26.1

(Unit: Metric ton)

O/R Min.(2.69m) Ext.(side area)						
Working radius (m)	10.0m Boom		16.9m Boom		23.8m Boom	
	Rated Lifting Capacity	O/R Reaction Force	Rated Lifting Capacity	O/R Reaction Force	Rated Lifting Capacity	O/R Reaction Force
2.5	20.00	27.0	15.00	22.8	12.00	20.3
3.0	20.00	30.3	15.00	25.5	12.00	22.5
3.5	18.70	32.1	15.00	28.1	12.00	24.8
4.0	14.60	29.8	14.30	29.9	12.00	27.1
4.5	11.70	28.2	11.40	28.3	10.50	27.3
5.0	9.60	27.1	9.30	27.2	8.90	26.9
5.5	8.00	26.3	7.70	26.4	7.50	26.4
6.0	6.80	25.8	6.50	26.0	6.30	25.9
6.5	5.80	25.5	5.50	25.6	5.40	25.8
7.0	5.00	25.3	4.60	25.2	4.60	25.6
7.5			3.90	25.0	3.90	25.4
8.0			3.30	24.8	3.20	25.0
9.0			2.30	24.5		
10.0			1.30	23.8		

SL-700R O/R Max. Reaction Force (Calculation Value)

(Unit: Metric ton)

O/R Ext. (front area)																
Working radius (m)	10.0m Boom		16.9m Boom		23.8m Boom		30.7m Boom		37.6m Boom		41.5m Boom		44.5m Boom			
	Rated Lifting Capacity	O/R Reaction Force	Rated Lifting Capacity	O/R Reaction Force	Rated Lifting Capacity	O/R Reaction Force	Rated Lifting Capacity	O/R Reaction Force	Rated Lifting Capacity	O/R Reaction Force	Rated Lifting Capacity	O/R Reaction Force	Rated Lifting Capacity	O/R Reaction Force		
2.5	70.00	33.5	32.00	19.4	25.00	17.0	12.50	15.4								
3.0	61.00	32.2	32.00	20.6	25.00	17.8	12.50	14.9								
3.5	55.00	31.6	32.00	21.7	25.00	18.7	12.50	14.3	12.00	14.5						
4.0	49.20	30.7	32.00	22.9	25.00	19.7	12.50	13.8	12.00	14.0	10.00	14.0				
4.5	44.10	29.9	32.00	24.0	25.00	20.6	12.50	14.1	12.00	13.6	10.00	13.5	8.00	13.5		
5.0	39.50	29.0	32.00	25.2	25.00	21.6	12.50	14.6	12.00	14.2	10.00	13.1	8.00	13.2		
5.5	35.70	28.2	32.00	26.3	25.00	22.5	12.50	15.2	12.00	14.7	10.00	13.4	8.00	12.8		
6.0	32.50	27.6	32.00	27.5	23.40	22.5	12.50	15.7	12.00	15.2	10.00	13.9	8.00	12.6		
6.5	29.50	26.9	29.00	26.8	22.00	22.5	12.50	16.2	12.00	15.7	10.00	14.3	8.00	13.0		
7.0	26.80	26.2	26.40	26.1	20.70	22.5	12.50	16.8	12.00	16.2	10.00	14.8	8.00	13.4		
7.5			24.00	25.5	19.50	22.5	12.50	17.3	12.00	16.7	10.00	15.2	8.00	13.7		
8.0			22.00	25.0	18.50	22.6	12.50	17.8	12.00	17.2	10.00	15.6	8.00	14.1		
9.0			19.00	24.4	16.60	22.6	12.50	18.9	12.00	18.2	10.00	16.5	8.00	14.9		
10.0			16.30	23.6	14.90	22.6	12.50	20.0	12.00	19.2	10.00	17.4	8.00	15.6		
11.0			13.70	22.7	13.60	22.7	12.00	20.6	11.10	19.4	10.00	18.2	8.00	16.3		
12.0			11.50	21.8	12.40	22.7	10.90	20.6	10.20	19.5	9.40	18.5	8.00	17.1		
13.0			10.00	21.3	11.40	22.8	10.00	20.7	9.40	19.6	8.70	18.7	8.00	17.8		
14.0					10.50	22.9	9.20	20.7	8.60	19.6	8.00	18.7	7.50	18.0		
15.0					9.70	23.0	8.50	20.8	8.00	19.7	7.50	18.9	7.00	18.2		
16.0					8.40	22.4	7.80	20.8	7.40	19.7	7.00	19.0	6.60	18.4		
17.0					7.30	21.9	7.30	20.9	6.90	19.8	6.50	19.1	6.20	18.5		
18.0					6.40	21.5	6.80	21.0	6.40	19.9	6.10	19.2	5.80	18.6		
19.0					5.60	21.2	6.30	21.1	6.00	20.0	5.80	19.4	5.40	18.7		
20.0					4.90	20.9	5.80	21.0	5.60	20.0	5.40	19.5	5.10	18.8		
21.0							5.20	20.8	5.30	20.2	5.10	19.6	4.80	18.9		
22.0							4.70	20.6	5.00	20.3	4.80	19.7	4.50	19.0		
24.0							3.80	20.3	4.30	20.3	4.20	19.8	4.00	19.2		
26.0							2.90	19.8	3.50	19.9	3.60	19.7	3.50	19.3		
28.0									2.80	19.6	3.00	19.6	3.10	19.5		
30.0									2.20	19.2	2.50	19.4	2.60	19.3		
32.0									1.70	19.0	2.00	19.2	2.10	19.1		
34.0									1.30	18.8	1.60	19.0	1.70	18.9		
36.0											1.20	18.8	1.30	18.7		
38.0											0.90	18.7	1.00	18.6		
40.0													0.70	18.4		

SL-700R O/R Max. Reaction Force (Calculation Value)

44.5m Boom + 8.3m Jlb												
O/R Max.(7.6m) Ext. (side area, rear area)												
Boom Angle (°)	Offset 7°			Offset 25°			Offset 45°			Offset 60°		
	Working Radius (m)	Weight (ton)	O/R Reaction Force (ton)	Working Radius (m)	Weight (ton)	O/R Reaction Force (ton)	Working Radius (m)	Weight (ton)	O/R Reaction Force (ton)	Working Radius (m)	Weight (ton)	O/R Reaction Force (ton)
84	5.8	4.00	15.6	8.7	3.50	16.8	10.5	2.20	15.6	11.5	1.40	14.6
80	10.1	4.00	20.0	12.8	3.50	20.9	14.2	2.20	18.7	15.0	1.40	17.2
77	13.3	4.00	23.6	15.6	3.20	23.2	16.9	2.15	21.0	17.5	1.40	19.2
75	15.4	4.00	26.1	17.5	2.90	24.5	18.7	2.10	22.6	19.2	1.40	20.7
73	17.3	3.65	27.5	19.2	2.65	25.6	20.4	2.05	24.1	20.8	1.40	22.1
70	19.9	3.20	29.3	21.7	2.45	27.7	23.0	2.00	26.5	23.2	1.40	24.3
68	21.5	2.85	30.0	23.2	2.25	28.6	24.6	1.90	27.8	24.7	1.40	25.7
65	24.0	2.40	31.2	25.6	2.05	30.4	26.9	1.80	29.9	26.9	1.40	27.9
63	25.5	1.90	30.8	27.1	1.80	30.9	28.3	1.65	30.7	28.3	1.40	29.4
60	27.5	1.30	30.3	29.1	1.20	30.2	30.1	1.10	30.0			
57	29.5	0.75	29.6									

44.5m Boom + 8.3m Jlb												
O/R Medium(7.2m) Ext. (side area)												
Boom Angle (°)	Offset 7°			Offset 25°			Offset 45°			Offset 60°		
	Working Radius (m)	Weight (ton)	O/R Reaction Force (ton)	Working Radius (m)	Weight (ton)	O/R Reaction Force (ton)	Working Radius (m)	Weight (ton)	O/R Reaction Force (ton)	Working Radius (m)	Weight (ton)	O/R Reaction Force (ton)
84	5.8	4.00	15.7	8.7	3.50	16.9	10.5	2.20	15.6	11.5	1.40	14.7
80	10.1	4.00	20.2	12.8	3.50	21.1	14.2	2.20	18.9	15.0	1.40	17.4
77	13.3	4.00	23.9	15.6	3.20	23.6	16.9	2.15	21.3	17.5	1.40	19.5
75	15.4	4.00	26.5	17.5	2.90	24.9	18.7	2.10	22.9	19.2	1.40	21.0
73	17.3	3.65	28.0	19.2	2.65	26.1	20.4	2.05	24.5	20.8	1.40	22.4
70	19.9	3.20	29.9	21.7	2.45	28.2	23.0	2.00	27.0	23.2	1.40	24.7
68	21.5	2.85	30.7	23.2	2.25	29.2	24.6	1.90	28.4	24.7	1.40	26.2
65	23.8	2.10	30.5	25.6	1.75	29.8	26.8	1.80	30.4	26.9	1.40	28.5
63	25.2	1.65	30.1	27.0	1.40	29.7	28.1	1.40	30.0	28.3	1.40	30.0
60	27.4	0.95	29.2	29.0	0.90	29.4	30.0	0.80	29.1			

SL-700R O/R Max. Reaction Force (Calculation Value)

44.5m Boom + 8.3m Jlb												
O/R Medium(6.5m) Ext. (side area)												
Boom Angle (°)	Offset 7°			Offset 25°			Offset 45°			Offset 60°		
	Working Radius (m)	Weight (ton)	O/R Reaction Force (ton)	Working Radius (m)	Weight (ton)	O/R Reaction Force (ton)	Working Radius (m)	Weight (ton)	O/R Reaction Force (ton)	Working Radius (m)	Weight (ton)	O/R Reaction Force (ton)
84	5.8	4.00	15.8	8.7	3.50	17.1	10.5	2.20	15.8	11.5	1.40	14.8
80	10.1	4.00	20.7	12.8	3.50	21.7	14.2	2.20	19.3	15.0	1.40	17.7
77	13.3	4.00	24.7	15.6	3.20	24.3	16.9	2.15	21.9	17.5	1.40	19.9
75	15.4	4.00	27.5	17.5	2.90	25.8	18.7	2.10	23.6	19.2	1.40	21.5
73	17.3	3.65	29.1	19.2	2.65	27.0	20.4	2.05	25.3	20.8	1.40	23.1
70	19.9	2.95	30.3	21.6	2.45	29.2	23.0	2.00	28.1	23.2	1.40	25.6
68	21.4	2.30	29.8	23.0	2.10	29.5	24.6	1.90	29.5	24.7	1.40	27.2
65	23.5	1.50	29.0	25.2	1.40	29.0	26.2	1.35	28.9			

44.5m Boom + 8.3m Jlb												
O/R Medium(5.4m) Ext. (side area)												
Boom Angle (°)	Offset 7°			Offset 25°			Offset 45°			Offset 60°		
	Working Radius (m)	Weight (ton)	O/R Reaction Force (ton)	Working Radius (m)	Weight (ton)	O/R Reaction Force (ton)	Working Radius (m)	Weight (ton)	O/R Reaction Force (ton)	Working Radius (m)	Weight (ton)	O/R Reaction Force (ton)
84	5.8	4.00	16.1	8.7	3.50	17.6	10.5	2.20	16.2	11.4	1.40	14.9
80	10.1	4.00	21.7	12.8	3.50	22.8	14.2	2.20	20.1	15.0	1.40	18.4
77	13.3	4.00	26.3	15.6	3.20	25.9	16.9	2.15	23.1	17.5	1.40	20.9
75	15.4	3.60	28.3	17.5	2.90	27.6	18.7	2.10	25.1	19.2	1.40	22.8
73	17.0	2.90	28.4	19.0	2.50	28.2	20.4	2.05	27.1	20.8	1.40	24.6
70	19.2	2.00	28.2	21.2	1.65	27.8	22.7	1.50	27.7	23.2	1.40	27.4

SL-700R O/R Max. Reaction Force (Calculation Value)

44.5m Boom + 8.3m Jlb												
O/R Medium(4.3m) Ext.												
Boom Angle (°)	Offset 7°			Offset 25°			Offset 45°			Offset 60°		
	Working Radius (m)	Weight (ton)	O/R Reaction Force (ton)	Working Radius (m)	Weight (ton)	O/R Reaction Force (ton)	Working Radius (m)	Weight (ton)	O/R Reaction Force (ton)	Working Radius (m)	Weight (ton)	O/R Reaction Force (ton)
84	5.8	4.00	16.6	8.7	3.50	18.4	10.5	2.20	16.8	11.5	1.40	15.4
80	10.1	4.00	23.2	12.8	3.50	24.6	14.2	2.20	21.5	15.0	1.40	19.4
77	13.2	3.45	27.0	15.6	2.70	26.6	16.9	2.15	25.1	17.5	1.40	22.5
75	14.8	2.60	26.9									

44.5m Boom + 8.3m Jlb												
O/R Ext. (front area)												
Boom Angle (°)	Offset 7°			Offset 25°			Offset 45°			Offset 60°		
	Working Radius (m)	Weight (ton)	O/R Reaction Force (ton)	Working Radius (m)	Weight (ton)	O/R Reaction Force (ton)	Working Radius (m)	Weight (ton)	O/R Reaction Force (ton)	Working Radius (m)	Weight (ton)	O/R Reaction Force (ton)
84	5.8	4.00	12.9	8.7	3.50	12.0	10.5	2.20	12.1	11.5	1.40	12.2
80	10.1	4.00	12.6	12.8	3.50	13.0	14.2	2.20	11.8	15.0	1.40	11.0
77	13.3	4.00	14.3	15.6	3.20	14.1	16.9	2.15	13.0	17.5	1.40	12.0
75	15.4	4.00	15.5	17.5	2.90	14.7	18.7	2.10	13.7	19.2	1.40	12.7
73	17.3	3.65	16.1	19.2	2.65	15.1	20.4	2.05	14.4	20.8	1.40	13.4
70	19.9	3.20	16.8	21.7	2.45	16.0	23.0	2.00	15.4	23.2	1.40	14.4
68	21.5	2.85	17.0	23.2	2.25	16.3	24.6	1.90	16.0	24.7	1.40	15.0
65	24.0	2.50	17.6	25.6	2.05	17.0	26.9	1.80	16.8	26.9	1.40	16.0
63	25.5	2.20	17.7	27.1	1.80	17.2	28.3	1.65	17.1	28.3	1.40	16.5
60	27.9	1.95	18.3	29.4	1.65	17.9	30.4	1.50	17.7			
57	30.1	1.65	18.6	31.6	1.45	18.4	32.3	1.35	18.2			
54	32.3	1.45	19.0	33.7	1.30	18.9	34.2	1.20	18.6			
51	34.3	1.30	19.5	35.7	1.20	19.4	36.0	1.15	19.2			
49	35.6	0.90	19.0	36.7	0.85	18.9	37.1	0.85	18.9			
46	37.3	0.50	18.6	38.2	0.50	18.6	38.6	0.50	18.6			

SL-700R O/R Max. Reaction Force (Calculation Value)

44.5m Boom + 12.9m Jib												
O/ R Max.(7.6m) Ext. (side area,rear area)												
Boom Angle (°)	Offset 7°			Offset 25°			Offset 45°			Offset 60°		
	Working Radius (m)	Weight (ton)	O/R Reaction Force (ton)	Working Radius (m)	Weight (ton)	O/R Reaction Force (ton)	Working Radius (m)	Weight (ton)	O/R Reaction Force (ton)	Working Radius (m)	Weight (ton)	O/R Reaction Force (ton)
84	6.9	2.50	14.6	11.3	2.40	16.2	14.1	1.30	14.9	15.7	0.70	14.0
80	11.6	2.50	18.3	15.5	2.25	19.4	18.1	1.30	17.7	19.1	0.70	16.2
77	15.1	2.50	21.3	18.6	2.10	21.6	20.9	1.30	19.8	21.8	0.70	18.0
75	17.3	2.50	23.3	20.5	2.00	23.0	22.7	1.25	21.1	23.5	0.70	19.3
73	19.4	2.50	25.3	22.3	1.85	24.2	24.5	1.25	22.5	25.2	0.70	20.5
70	22.4	2.35	27.7	25.0	1.70	26.1	27.0	1.20	24.5	27.6	0.70	22.4
68	24.3	2.10	28.7	26.8	1.55	27.1	28.7	1.20	26.0	29.1	0.70	23.7
65	26.9	1.90	30.4	29.4	1.40	28.8	31.1	1.15	27.9	31.3	0.70	25.6
63	28.4	1.50	30.1	31.1	1.30	29.9	32.6	1.10	29.1	32.7	0.70	26.8
60	30.7	0.95	29.5	33.2	0.90	29.8	34.6	0.80	29.3			

44.5m Boom + 12.9m Jib												
O/R Medium(7.2m) Ext. (side area)												
Boom Angle (°)	Offset 7°			Offset 25°			Offset 45°			Offset 60°		
	Working Radius (m)	Weight (ton)	O/R Reaction Force (ton)	Working Radius (m)	Weight (ton)	O/R Reaction Force (ton)	Working Radius (m)	Weight (ton)	O/R Reaction Force (ton)	Working Radius (m)	Weight (ton)	O/R Reaction Force (ton)
84	6.9	2.50	14.6	11.3	2.40	16.3	14.1	1.30	15.0	15.5	0.70	13.9
80	11.6	2.50	18.5	15.5	2.20	19.5	18.1	1.30	17.9	19.1	0.70	16.3
77	15.1	2.50	21.6	18.6	2.10	22.0	20.9	1.30	20.0	21.8	0.70	18.2
75	17.3	2.50	23.7	20.5	2.00	23.4	22.7	1.25	21.4	23.5	0.70	19.5
73	19.4	2.50	25.7	22.3	1.85	24.6	24.5	1.25	22.9	25.2	0.70	20.8
70	22.4	2.35	28.3	25.0	1.70	26.5	27.0	1.20	24.9	27.6	0.70	22.8
68	24.3	2.10	29.3	26.8	1.55	27.6	28.7	1.20	26.4	29.1	0.70	24.1
65	26.8	1.65	29.9	29.4	1.40	29.4	31.1	1.15	28.5	31.3	0.70	26.0
63	28.3	1.25	29.5	30.8	1.10	29.3	32.5	1.10	29.6	32.7	0.70	27.3
60	30.5	0.70	28.7									

SL-700R O/R Max. Reaction Force (Calculation Value)

44.5m Boom + 12.9m Jib												
O/R Medium(6.5m) Ext. (side area)												
Boom Angle (°)	Offset 7°			Offset 25°			Offset 45°			Offset 60°		
	Working Radius (m)	Weight (ton)	O/R Reaction Force (ton)	Working Radius (m)	Weight (ton)	O/R Reaction Force (ton)	Working Radius (m)	Weight (ton)	O/R Reaction Force (ton)	Working Radius (m)	Weight (ton)	O/R Reaction Force (ton)
84	6.9	2.50	14.7	11.3	2.40	16.5	14.1	1.30	15.1	15.5	0.70	14.0
80	11.6	2.50	18.8	15.5	2.25	20.0	18.1	1.30	18.2	19.1	0.70	16.5
77	15.1	2.50	22.2	18.6	2.10	22.6	20.9	1.30	20.6	21.8	0.70	18.6
75	17.3	2.50	24.4	20.5	2.00	24.1	22.7	1.25	22.0	23.5	0.70	20.0
73	19.4	2.50	26.6	22.3	1.85	25.4	24.5	1.25	23.6	25.2	0.70	21.4
70	22.4	2.35	29.4	25.0	1.70	27.6	27.0	1.20	25.8			
68	24.0	1.85	29.1	26.8	1.55	28.7	28.7	1.20	27.4			
65	26.3	1.20	28.6	29.0	1.00	28.3	30.9	0.90	28.1			

44.5m Boom + 12.9m Jib												
O/R Medium(5.4m) Ext. (side area)												
Boom Angle (°)	Offset 7°			Offset 25°			Offset 45°			Offset 60°		
	Working Radius (m)	Weight (ton)	O/R Reaction Force (ton)	Working Radius (m)	Weight (ton)	O/R Reaction Force (ton)	Working Radius (m)	Weight (ton)	O/R Reaction Force (ton)	Working Radius (m)	Weight (ton)	O/R Reaction Force (ton)
84	6.9	2.50	14.9	11.3	2.40	17.0	14.1	1.30	15.4	15.5	0.70	14.1
80	11.6	2.50	19.6	15.5	2.25	21.0	18.1	1.30	19.0	19.1	0.70	17.1
77	15.1	2.50	23.5	18.6	2.10	24.0	20.9	1.30	21.7	21.8	0.70	19.4
75	17.3	2.50	26.0	20.5	2.00	25.8	22.7	1.25	23.3	23.5	0.70	21.0
73	19.3	2.50	28.5	22.3	1.85	27.2	24.5	1.25	25.2	25.2	0.70	22.7
70	21.8	1.50	27.5									

Tire size	Front	: 385 / 95 R25 170E ROAD
	Rear	: 385 / 95 R25 170E ROAD

Safety devices : Emergency steering device
Rear wheel steering lock system (automatic)
Brake fluid leak warning device
Service brake lock
Suspension lock
Engine overspeed alarm
Radiator coolant level warning device
Air filter service warning device
Automatic open/close side mirror

Standard equipment : Centralized lubricating system
Bypass oil filter
Aluminum sheet for outrigger
Left side view camera
Rear view camera

Optional equipments : Wheel stopper

3.General dimensions

Overall length		:	12900 mm
Overall width		:	2990 mm
Overall height		:	3740 mm
Wheel base		:	1500+3800+1500=6800 mm
Treads;	Front	:	2540 mm
	Rear	:	2540 mm

Outriggers	Type	Hydraulic H-beam type (with float and vertical cylinder in single unit)
	Extension width	: 7600mm(Fully extended)
		: 7200mm(Intermediately extended)
		: 6500mm(Intermediately extended)
		: 5400mm(Intermediately extended)
		: 4300mm(Intermediately extended)
		: 2690mm(Fully retracted)

Gross vehicle weight	: 41145 kg
Front-Front 1st axle	: 10260 kg
Front-Rear 2nd axle	: 10400 kg
Rear-Front 3rd axle	: 7965 kg
Rear-Rear 4th axle	: 12520 kg

SL-700R O/R Max. Reaction Force (Calculation Value)

44.5m Boom + 12.9m Jib												
O/R Medium(4.3m) Ext.(side area)												
Boom Angle (°)	Offset 7°			Offset 25°			Offset 45°			Offset 60°		
	Working Radius (m)	Weight (ton)	O/R Reaction Force (ton)	Working Radius (m)	Weight (ton)	O/R Reaction Force (ton)	Working Radius (m)	Weight (ton)	O/R Reaction Force (ton)	Working Radius (m)	Weight (ton)	O/R Reaction Force (ton)
84	6.9	2.50	15.2	11.3	2.40	17.7	14.1	1.30	15.9	15.5	0.70	14.4
80	11.6	2.50	20.8	15.5	2.25	22.5	18.1	1.30	20.1	19.1	0.70	17.9
77	15.1	2.50	25.5	18.6	2.10	26.1	20.9	1.30	23.4	21.8	0.70	20.8

44.5m Boom + 12.9m Jib												
O/R Ext.(front area)												
Boom Angle (°)	Offset 7°			Offset 25°			Offset 45°			Offset 60°		
	Working Radius (m)	Weight (ton)	O/R Reaction Force (ton)	Working Radius (m)	Weight (ton)	O/R Reaction Force (ton)	Working Radius (m)	Weight (ton)	O/R Reaction Force (ton)	Working Radius (m)	Weight (ton)	O/R Reaction Force (ton)
84	6.9	2.50	12.8	11.3	2.40	11.8	14.1	1.30	12.0	15.7	0.70	12.3
80	11.6	2.50	11.6	15.5	2.25	12.2	18.1	1.30	11.2	19.1	0.70	11.1
77	15.1	2.50	13.1	18.6	2.10	13.3	20.9	1.30	12.3	21.8	0.70	11.4
75	17.3	2.50	14.1	20.5	2.00	13.9	22.7	1.25	12.9	23.5	0.70	12.0
73	19.4	2.50	15.0	22.3	1.85	14.4	24.5	1.25	13.6	25.2	0.70	12.6
70	22.4	2.35	16.0	25.0	1.70	15.2	27.0	1.20	14.5	27.6	0.70	13.5
68	24.3	2.10	16.4	26.8	1.55	15.6	28.7	1.20	15.1	29.1	0.70	14.0
65	27.0	1.90	17.1	29.4	1.40	16.3	31.1	1.15	15.9	31.3	0.70	14.9
63	28.7	1.70	17.4	31.1	1.30	16.8	32.6	1.10	16.4	32.7	0.70	15.4
60	31.1	1.45	17.7	33.5	1.20	17.4	34.8	1.05	17.1			
57	33.5	1.30	18.3	35.7	1.10	18.0	36.8	1.00	17.8			
54	35.8	1.15	18.7	37.8	0.95	18.4	38.7	0.90	18.2			
51	38.0	1.00	19.1	39.8	0.85	18.8	40.5	0.80	18.7			
49	39.3	0.75	18.9	41.0	0.75	19.0	41.6	0.75	19.0			

SL-700R O/R Max. Reaction Force (Calculation Value)

44.5m Boom + 17.5m Jib												
O/R Max.(7.6m) Ext.(side area,rear area)												
Boom Angle (°)	Offset 7°			Offset 25°			Offset 45°			Offset 60°		
	Working Radius (m)	Weight (ton)	O/R Reaction Force (ton)	Working Radius (m)	Weight (ton)	O/R Reaction Force (ton)	Working Radius (m)	Weight (ton)	O/R Reaction Force (ton)	Working Radius (m)	Weight (ton)	O/R Reaction Force (ton)
84	8.0	1.50	13.8	13.7	1.00	14.4	18.1	0.70	14.4	19.9	0.35	13.6
80	12.9	1.40	16.7	18.2	0.90	16.8	22.1	0.65	16.7	23.6	0.35	15.7
77	16.5	1.25	18.7	21.3	0.85	18.6	25.0	0.60	18.4	26.3	0.35	17.4
75	18.7	1.20	20.0	23.4	0.85	20.0	26.9	0.60	19.6	28.0	0.35	18.6
73	20.9	1.15	21.4	25.5	0.80	21.2	28.7	0.60	20.8	29.7	0.35	19.7
70	24.1	1.05	23.3	28.6	0.80	23.4	31.3	0.55	22.5	32.0	0.35	21.4
68	26.2	1.00	24.7	30.5	0.75	24.6	33.1	0.55	23.8	33.5	0.35	22.5
65	29.3	0.95	26.7	33.2	0.70	26.3	35.5	0.55	25.6	35.8	0.35	24.3
63	31.3	0.90	28.0	35.0	0.70	27.7	37.1	0.55	26.9	37.2	0.35	25.5
60	34.1	0.70	29.1	37.5	0.55	28.8	39.3	0.50	28.5			

44.5m Boom + 17.5m Jib												
O/R Medium(7.2m) Ext.(side area)												
Boom Angle (°)	Offset 7°			Offset 25°			Offset 45°			Offset 60°		
	Working Radius (m)	Weight (ton)	O/R Reaction Force (ton)	Working Radius (m)	Weight (ton)	O/R Reaction Force (ton)	Working Radius (m)	Weight (ton)	O/R Reaction Force (ton)	Working Radius (m)	Weight (ton)	O/R Reaction Force (ton)
84	8.0	1.50	13.8	13.7	1.00	14.4	18.1	0.70	14.5	19.9	0.35	13.6
80	12.9	1.40	16.8	18.2	0.90	17.0	22.1	0.65	16.8	23.6	0.35	15.9
77	16.5	1.25	18.9	21.3	0.85	18.9	25.0	0.60	18.6	26.3	0.35	17.6
75	18.7	1.20	20.3	23.4	0.85	20.3	26.9	0.60	19.9	28.0	0.35	18.8
73	20.9	1.15	21.7	25.5	0.80	21.6	28.7	0.60	21.1	29.7	0.35	20.0
70	24.1	1.05	23.7	28.6	0.80	23.8	31.3	0.55	22.8	32.0	0.35	21.7
68	26.2	1.00	25.1	30.5	0.75	25.0	33.1	0.55	24.2	33.5	0.35	22.9
65	29.3	0.95	27.3	33.2	0.70	26.8	35.5	0.55	26.1	35.8	0.35	24.7
63	31.3	0.90	28.6	35.0	0.70	28.3	37.1	0.55	27.5	37.2	0.35	25.9

SL-700R O/R Max. Reaction Force (Calculation Value)

44.5m Boom + 17.5m Jib												
O/R Medium(6.5m) Ext. (side area)												
Boom Angle (°)	Offset 7°			Offset 25°			Offset 45°			Offset 60°		
	Working Radius (m)	Weight (ton)	O/R Reaction Force (ton)	Working Radius (m)	Weight (ton)	O/R Reaction Force (ton)	Working Radius (m)	Weight (ton)	O/R Reaction Force (ton)	Working Radius (m)	Weight (ton)	O/R Reaction Force (ton)
84	8.0	1.50	13.8	13.7	1.00	14.6	18.1	0.70	14.6	19.9	0.35	13.7
80	12.9	1.40	17.1	18.2	0.90	17.3	22.1	0.65	17.1	23.6	0.35	16.1
77	16.5	1.25	19.3	21.3	0.85	19.3	25.0	0.60	19.0	26.3	0.35	18.0
75	18.7	1.20	20.8	23.4	0.85	20.8	26.9	0.60	20.4	28.0	0.35	19.2
73	20.9	1.15	22.4	25.5	0.80	22.2	28.7	0.60	21.7	29.7	0.35	20.5
70	24.1	1.05	24.5	28.6	0.80	24.6	31.3	0.55	23.6	32.0	0.35	22.3
68	26.2	1.00	26.0	30.5	0.75	25.9	33.1	0.55	25.1	33.5	0.35	23.6
65	29.3	0.95	28.3	33.2	0.70	27.9	35.5	0.55	27.1	35.8	0.35	25.6

44.5m Boom + 17.5m Jib												
O/R Medium(5.4m) Ext. (side area)												
Boom Angle (°)	Offset 7°			Offset 25°			Offset 45°			Offset 60°		
	Working Radius (m)	Weight (ton)	O/R Reaction Force (ton)	Working Radius (m)	Weight (ton)	O/R Reaction Force (ton)	Working Radius (m)	Weight (ton)	O/R Reaction Force (ton)	Working Radius (m)	Weight (ton)	O/R Reaction Force (ton)
84	8.0	1.50	13.9	13.7	1.00	14.8	18.1	0.70	14.9	19.9	0.35	13.8
80	12.9	1.40	17.6	18.2	0.90	17.9	22.1	0.65	17.7	23.6	0.35	16.6
77	16.5	1.25	20.3	21.3	0.85	20.2	25.0	0.60	19.9	26.3	0.35	18.7
75	18.7	1.20	22.0	23.4	0.85	22.0	26.9	0.60	21.5	28.0	0.35	20.1
73	20.9	1.15	23.7	25.5	0.80	23.6	28.7	0.60	23.0	29.7	0.35	21.6

SL-700R O/R Max. Reaction Force (Calculation Value)

44.5m Boom + 17.5m Jib												
O/R Medium(4.3m) Ext. (side area)												
Boom Angle (°)	Offset 7°			Offset 25°			Offset 45°			Offset 60°		
	Working Radius (m)	Weight (ton)	O/R Reaction Force (ton)	Working Radius (m)	Weight (ton)	O/R Reaction Force (ton)	Working Radius (m)	Weight (ton)	O/R Reaction Force (ton)	Working Radius (m)	Weight (ton)	O/R Reaction Force (ton)
84	8.0	1.50	14.1	13.7	1.00	15.2	18.1	0.70	15.2	19.9	0.35	14.0
80	12.9	1.40	18.5	18.2	0.90	18.9	22.1	0.65	18.7	23.6	0.35	17.3
77	16.5	1.25	21.7	21.3	0.85	21.7	25.0	0.60	21.3	26.3	0.35	19.9

44.5m Boom + 17.5m Jib												
O/R Ext. (front area)												
Boom Angle (°)	Offset 7°			Offset 25°			Offset 45°			Offset 60°		
	Working Radius (m)	Weight (ton)	O/R Reaction Force (ton)	Working Radius (m)	Weight (ton)	O/R Reaction Force (ton)	Working Radius (m)	Weight (ton)	O/R Reaction Force (ton)	Working Radius (m)	Weight (ton)	O/R Reaction Force (ton)
84	8.0	1.50	12.8	13.7	1.00	12.2	18.1	0.70	12.0	19.9	0.35	12.3
80	12.9	1.40	11.1	18.2	0.90	10.8	22.1	0.65	10.8	23.6	0.35	11.1
77	16.5	1.25	11.7	21.3	0.85	11.7	25.0	0.60	11.5	26.3	0.35	11.0
75	18.7	1.20	12.4	23.4	0.85	12.4	26.9	0.60	12.1	28.0	0.35	11.6
73	20.9	1.15	13.1	25.5	0.80	12.9	28.7	0.60	12.7	29.7	0.35	12.2
70	24.1	1.05	13.9	28.6	0.80	13.9	31.3	0.55	13.5	32.0	0.35	13.0
68	26.2	1.00	14.5	30.5	0.75	14.4	33.1	0.55	14.1	33.5	0.35	13.5
65	29.3	0.95	15.4	33.2	0.70	15.2	35.5	0.55	14.9	35.8	0.35	14.3
63	31.3	0.90	15.9	35.0	0.70	15.8	37.1	0.55	15.4	37.2	0.35	14.8
60	34.2	0.85	16.7	37.5	0.65	16.4	39.3	0.50	16.1			
57	36.9	0.85	17.6	39.9	0.65	17.2	41.4	0.50	16.8			
54	39.4	0.80	18.2	42.2	0.60	17.8	43.4	0.50	17.5			
51	41.9	0.75	18.9	44.4	0.60	18.5	45.1	0.50	18.1			
49	43.2	0.55	18.7	45.7	0.55	18.8						

Spec.No.5210000200

LIFTING CAPACITIES (1)

(Unit : Metric ton)

Outriggers fully extended (7.6m) over side and over rear							
Working radius(m)	10.0m Boom	16.9m Boom	23.8m Boom	30.7m Boom	37.6m Boom	41.5m Boom	44.5m Boom
2.5	70.00*	32.00	25.00	12.50			
3.0	61.00*	32.00	25.00	12.50			
3.5	55.00*	32.00	25.00	12.50	12.00		
4.0	49.20*	32.00	25.00	12.50	12.00	10.00	
4.5	44.10	32.00	25.00	12.50	12.00	10.00	8.00
5.0	39.50	32.00	25.00	12.50	12.00	10.00	8.00
5.5	35.70	32.00	25.00	12.50	12.00	10.00	8.00
6.0	32.50	32.00	23.40	12.50	12.00	10.00	8.00
6.5	29.50	29.00	22.00	12.50	12.00	10.00	8.00
7.0	26.80	26.40	20.70	12.50	12.00	10.00	8.00
7.5		24.00	19.50	12.50	12.00	10.00	8.00
8.0		22.00	18.50	12.50	12.00	10.00	8.00
9.0		18.10	16.60	12.50	12.00	10.00	8.00
10.0		14.60	14.40	12.50	12.00	10.00	8.00
11.0		12.00	11.80	12.00	11.10	10.00	8.00
12.0		10.00	9.80	10.90	10.20	9.40	8.00
13.0		8.40	8.20	9.30	9.40	8.70	8.00
14.0			7.00	8.00	8.50	8.00	7.50
15.0			5.95	6.90	7.50	7.50	7.00
16.0			5.10	6.05	6.60	6.80	6.60
17.0			4.35	5.30	5.80	6.05	6.20
18.0			3.65	4.65	5.15	5.40	5.50
19.0			3.00	4.05	4.60	4.80	4.95
20.0			2.45	3.55	4.10	4.30	4.45
21.0				3.05	3.65	3.85	4.00
22.0				2.60	3.20	3.45	3.60
24.0				1.85	2.45	2.70	2.90
26.0				1.25	1.80	2.05	2.25
28.0					1.30	1.55	1.70
30.0					0.90	1.10	1.30
32.0						0.75	0.90
33.0						0.60	0.75
34.0							0.60
Critical boom angle(°)	—	—	—	—	28	30	34
Parts of line	16*/10	7	5	4	4	4	4
Standard hook	for 70t*/48t	for 34t					
Hook mass (kg)	530*/470	330					

Spec.No.5210000200

LIFTING CAPACITIES (2)

(Unit : Metric ton)

Outriggers intermediately extended (7.2m) over side							
Working radius(m)	10.0m Boom	16.9m Boom	23.8m Boom	30.7m Boom	37.6m Boom	41.5m Boom	44.5m Boom
2.5	55.00*	32.00	25.00	12.50			
3.0	55.00*	32.00	25.00	12.50			
3.5	50.00*	32.00	25.00	12.50	12.00		
4.0	46.00	32.00	25.00	12.50	12.00	10.00	
4.5	42.00	32.00	25.00	12.50	12.00	10.00	8.00
5.0	38.50	32.00	25.00	12.50	12.00	10.00	8.00
5.5	35.00	32.00	25.00	12.50	12.00	10.00	8.00
6.0	32.00	32.00	23.40	12.50	12.00	10.00	8.00
6.5	29.50	29.00	22.00	12.50	12.00	10.00	8.00
7.0	26.80	26.40	20.70	12.50	12.00	10.00	8.00
7.5		24.00	19.50	12.50	12.00	10.00	8.00
8.0		21.10	18.50	12.50	12.00	10.00	8.00
9.0		16.40	16.30	12.50	12.00	10.00	8.00
10.0		13.20	13.10	12.50	12.00	10.00	8.00
11.0		10.80	10.70	11.80	11.10	10.00	8.00
12.0		9.00	8.80	9.90	10.20	9.40	8.00
13.0		7.60	7.40	8.40	9.00	8.70	8.00
14.0			6.30	7.20	7.80	8.00	7.50
15.0			5.30	6.30	6.85	7.00	7.00
16.0			4.50	5.45	6.00	6.25	6.40
17.0			3.80	4.75	5.30	5.50	5.70
18.0			3.10	4.15	4.65	4.90	5.05
19.0			2.50	3.60	4.10	4.35	4.50
20.0			2.00	3.05	3.65	3.85	4.05
21.0				2.60	3.20	3.45	3.60
22.0				2.20	2.80	3.05	3.25
24.0				1.50	2.05	2.35	2.50
26.0				0.95	1.55	1.75	1.90
28.0					1.05	1.30	1.45
30.0					0.65	0.85	1.00
32.0							0.65
Critical boom angle(°)	—	—	—	—	30	36	39
Parts of line	16*/10	7	5	4	4	4	4
Standard hook	for 70t*/48t	for 34t					
Hook mass (kg)	530*/470	330					

Spec.No.5210000200

LIFTING CAPACITIES (3)

(Unit : Metric ton)

Outriggers intermediately extended (6.5m) over side							
Working radius(m)	10.0m Boom	16.9m Boom	23.8m Boom	30.7m Boom	37.6m Boom	41.5m Boom	44.5m Boom
2.5	50.00*	32.00	25.00	12.50			
3.0	50.00*	32.00	25.00	12.50			
3.5	46.00	32.00	25.00	12.50	12.00		
4.0	42.00	32.00	25.00	12.50	12.00	10.00	
4.5	38.00	32.00	25.00	12.50	12.00	10.00	8.00
5.0	34.50	32.00	25.00	12.50	12.00	10.00	8.00
5.5	31.50	32.00	25.00	12.50	12.00	10.00	8.00
6.0	29.00	32.00	23.40	12.50	12.00	10.00	8.00
6.5	25.50	26.90	22.00	12.50	12.00	10.00	8.00
7.0	22.00	22.80	20.70	12.50	12.00	10.00	8.00
7.5		19.60	19.20	12.50	12.00	10.00	8.00
8.0		17.10	17.00	12.50	12.00	10.00	8.00
9.0		13.40	13.30	12.50	12.00	10.00	8.00
10.0		10.80	10.60	11.70	12.00	10.00	8.00
11.0		8.80	8.70	9.70	10.40	10.00	8.00
12.0		7.30	7.20	8.20	8.80	8.90	8.00
13.0		6.10	6.00	6.95	7.50	7.80	7.70
14.0			5.00	5.95	6.50	6.70	6.90
15.0			4.20	5.10	5.65	5.90	6.00
16.0			3.45	4.40	4.90	5.15	5.30
17.0			2.75	3.80	4.30	4.55	4.70
18.0			2.15	3.25	3.75	4.00	4.15
19.0			1.65	2.75	3.30	3.50	3.65
20.0			1.20	2.25	2.90	3.10	3.25
21.0				1.85	2.45	2.70	2.90
22.0				1.50	2.10	2.35	2.55
24.0				0.85	1.45	1.70	1.85
26.0					0.90	1.15	1.35
28.0						0.70	0.85
Critical boom angle(°)	—	—	—	25	40	43	47
Parts of line	16*/10	7	5	4	4	4	4
Standard hook	for 70t*/48t	for 34t					
Hook mass (kg)	530*/470	330					

Spec.No.5210000200

LIFTING CAPACITIES (4)

(Unit : Metric ton)

Outriggers intermediately extended (5.4m) over side							
Working radius(m)	10.0m Boom	16.9m Boom	23.8m Boom	30.7m Boom	37.6m Boom	41.5m Boom	44.5m Boom
2.5	50.00*	32.00	25.00	12.50			
3.0	50.00*	32.00	25.00	12.50			
3.5	46.00	32.00	25.00	12.50	12.00		
4.0	42.00	32.00	25.00	12.50	12.00	10.00	
4.5	38.00	32.00	25.00	12.50	12.00	10.00	8.00
5.0	33.00	31.50	25.00	12.50	12.00	10.00	8.00
5.5	26.70	26.30	23.50	12.50	12.00	10.00	8.00
6.0	22.20	21.70	20.30	12.50	12.00	10.00	8.00
6.5	18.80	18.30	17.70	12.50	12.00	10.00	8.00
7.0	16.20	15.70	15.60	12.50	12.00	10.00	8.00
7.5		13.70	13.60	12.50	12.00	10.00	8.00
8.0		12.00	11.90	12.50	12.00	10.00	8.00
9.0		9.40	9.30	10.40	10.40	10.00	8.00
10.0		7.50	7.40	8.40	8.80	8.80	8.00
11.0		6.10	6.00	7.00	7.50	7.50	7.50
12.0		5.00	4.90	5.80	6.35	6.50	6.60
13.0		4.10	3.95	4.90	5.40	5.60	5.75
14.0			3.20	4.10	4.60	4.85	5.00
15.0			2.50	3.45	3.95	4.20	4.35
16.0			1.85	2.90	3.40	3.60	3.75
17.0			1.30	2.40	2.90	3.10	3.30
18.0			0.80	1.90	2.50	2.70	2.85
19.0				1.45	2.05	2.30	2.45
20.0				1.05	1.65	1.90	2.10
21.0				0.75	1.30	1.60	1.80
22.0					1.00	1.30	1.45
Critical boom angle(°)	—	—	30	40	50	54	57
Parts of line	16*/10	7	5	4	4	4	4
Standard hook	for 70t*/48t	for 34t					
Hook mass (kg)	530*/470	330					

Spec.No.5210000200

LIFTING CAPACITIES (5)

(Unit : Metric ton)

Outriggers intermediately extended (4.3m) over side							
Working radius(m)	10.0m Boom	16.9m Boom	23.8m Boom	30.7m Boom	37.6m Boom	41.5m Boom	44.5m Boom
2.5	40.00	32.00	25.00	12.50			
3.0	40.00	32.00	25.00	12.50			
3.5	40.00	32.00	25.00	12.50	12.00		
4.0	32.00	31.00	25.00	12.50	12.00	10.00	
4.5	25.70	25.30	21.90	12.50	12.00	10.00	8.00
5.0	20.60	20.30	18.50	12.50	12.00	10.00	8.00
5.5	17.00	16.70	15.90	12.50	12.00	10.00	8.00
6.0	14.40	14.00	13.70	12.50	12.00	10.00	8.00
6.5	12.30	11.90	11.90	12.00	12.00	10.00	8.00
7.0	10.70	10.30	10.20	10.90	10.80	10.00	8.00
7.5		8.90	8.90	9.70	9.70	10.00	8.00
8.0		7.80	7.70	8.70	8.80	8.80	8.00
9.0		6.10	6.00	6.90	7.30	7.30	7.40
10.0		4.80	4.70	5.60	6.10	6.10	6.20
11.0		3.80	3.65	4.55	5.05	5.20	5.30
12.0		3.00	2.85	3.70	4.20	4.40	4.50
13.0		2.30	2.10	3.00	3.50	3.70	3.80
14.0			1.40	2.45	2.95	3.10	3.25
15.0				1.90	2.40	2.65	2.75
16.0				1.40	2.00	2.20	2.30
17.0					1.60	1.80	1.95
Critical boom angle(°)	—	—	46	53	60	63	65
Parts of line	10	7	5	4	4	4	4
Standard hook	for 48t	for 34t					
Hook mass (kg)	470	330					